SUMMARY SYNTESI®

- GENERAL TECHNICAL DATA Syntesi® — C1.4
- Syntesi® KEY TO CODES — C1.8

- Syntesi® FILTER — C1.9

- Syntesi® DEPURATOR — C1.12

- Syntesi® ACTIVE CARBON FILTER — C1.15

- Syntesi® REGULATOR — C1.18

- Syntesi® IN-SERIES REGULATOR — C1.21

- Syntesi® PILOT OPERATED REGULATOR — C1.24

- PROPORTIONAL PRECISION PRESSURE REGULATOR SYNTRONIC SERIES — C6.19

- Syntesi® FILTER-REGULATOR — C1.28

- Syntesi® LUBRICATOR — C1.33

- Syntesi® SHUT-OFF-VALVE — C1.36

- Syntesi® SHUT-OFF-VALVE SAFE AIR® SERIES — C1.39

METAL WORK PNEUMATIC

- **Syntesi® PROGRESSIVE STARTER** — C1.49

- **Syntesi® PRESSURE SWITCHES** — C1.51

- **Syntesi® AIR TAKE-OFF** — 2 WAYS 4 WAYS — C1.53

- **FR + LUB Syntesi®** — C1.55

- **V3V + FR + LUB Syntesi®** — C1.58

- **FIL + DEP Syntesi®** — C1.61

- **FIL + LUB Syntesi®** — C1.63

- **Syntesi® ACCESSORIES** — C1.65

- **Syntesi® SPARE PARTS** — C1.68

GENERAL TECHNICAL DATA SYNTESi®

Syntesi® is an important milestone achieved by Metal Work, the result of thirty years' experience producing air-treatment units. It has been studied in minute detail to obtain the best possible performance in a reduced space and with limited weight. The capacity is much higher than that of other units of the same size.
This modular unit features a very simple yet effective system that requires no brackets, stay bolts or yoke for assembling the elements.
The basic version of Syntesi® incorporates numerous functions that are not provided or are only optional with traditional units. Examples are padlockable knobs, additional pneumatic ports on the front and back, flow options from left to right or vice versa, regulators with compensation system - which are accurate even when the upstream pressure changes, with rapid downstream pressure relief - full indelible marking, automatic condensate drain even in size 1, and 360° visual inspection of oil and condensate levels. The basic materials, technopolymer and nickel-plated brass have excellent corrosion resistance. An anti-corrosion version is available with stainless steel components (screws, plates) or Geomet®-reated ones (regulator springs).

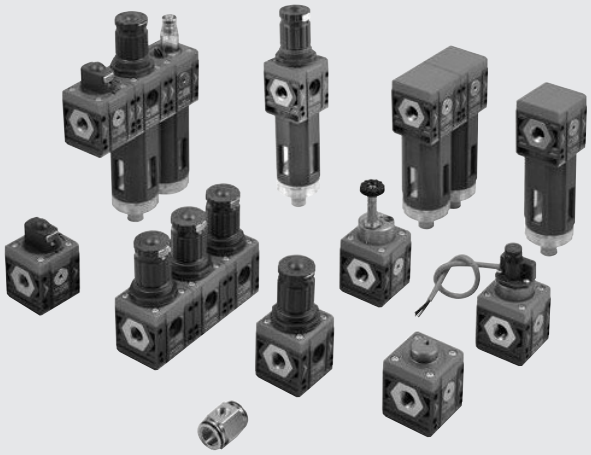

TECHNICAL DATA		SIZE 1			SIZE 2			
Threaded port		1/8″	1/4″	3/8″	3/8″	1/2″	3/4″	1″
Max. input pressure	bar	15			13			
	MPa	1.5			1.3			
	psi	217			188			
Flow rate		See catalogue of the various elements						
Min/max temperature at 10 bar; 1 MPa; 145 psi	°C	from -10 to +50			from -10 to +50			
Padlockable knob		The knobs of the regulators, filter regulators and standard sectioning valves can all be padlocked						
Fluid		Compressed air or other inert gases						
Mounting position		See catalogue of the various elements						
Direction of flow		Flow options right to left or vice versa						
Additional air take-off, for pressure gauges or fittings		1/8″, front and rear, on all modules			1/4″, front and rear, on all modules			
Wall fixing screws		No. 2 M4 screws			No. 2 M5 screws			
Certification for potentially explosive atmosphere according to Atex 2014/34/EU rule		Ex II 3G Ex h IIC T5 Gc -10°C < Ta < 50°C II 3D Ex h IIIC T100 °C Dc						

ANTI-CORROSION VERSION

Differences compared to the standard version:
- stainless steel screws
- stainless steel plate for R, FR, V3V knobs
- Geomet®-treated regulator spring and filter-regulator

FIXING TO FRONT PORTS

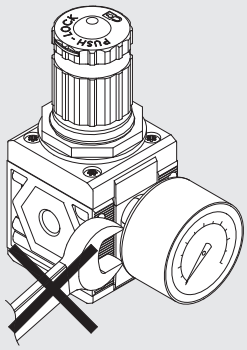

Do not use a spanner for fixing taper threaded elements to the front ports. Mount by hand and apply a liquid sealant (not teflon®).

ROTARY BUSHINGS

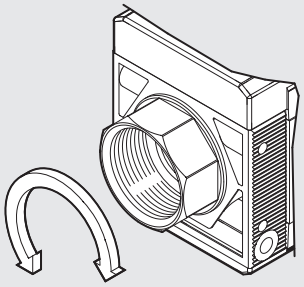

3/4″ and 1″ bushings in Size 2 rotate freely to facilitate assembly operations.

LASER MARKING

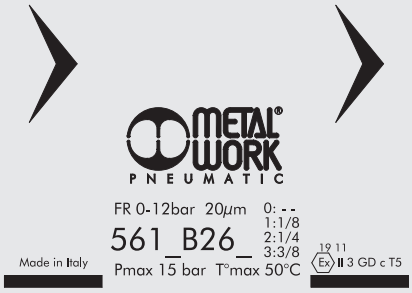

The following is marked indelibly on the body:
- Metal Work trademark
- Code
- Maximum pressure and temperature
- Degree of filtration or pressure range, where relevant
- Week and year of manufacture
- Atex category
- Made in Italy

MOUNTING OPTIONS

On the wall, using two screws

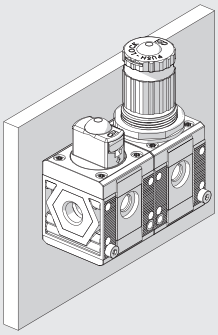

On a panel

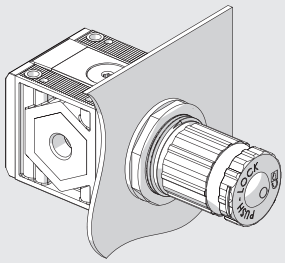

Using knob bracket

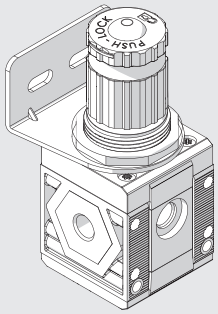

Using a bracket

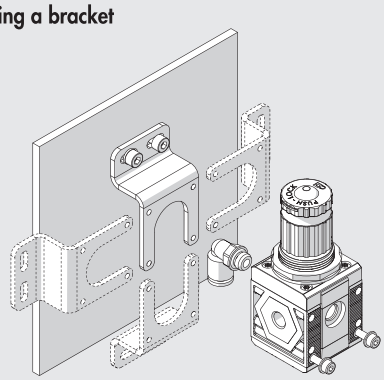

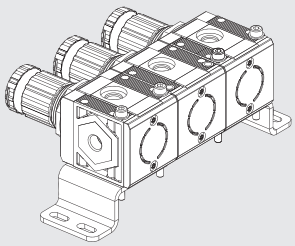

The bracket can be secured in any position, and the fittings can be mounted on the pressure gauge air intake at the back of the unit.

On a DIN EN50022 bar with the apposite adaptator

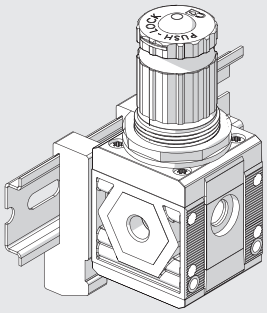

MODULARITY AND FLEXIBILITY

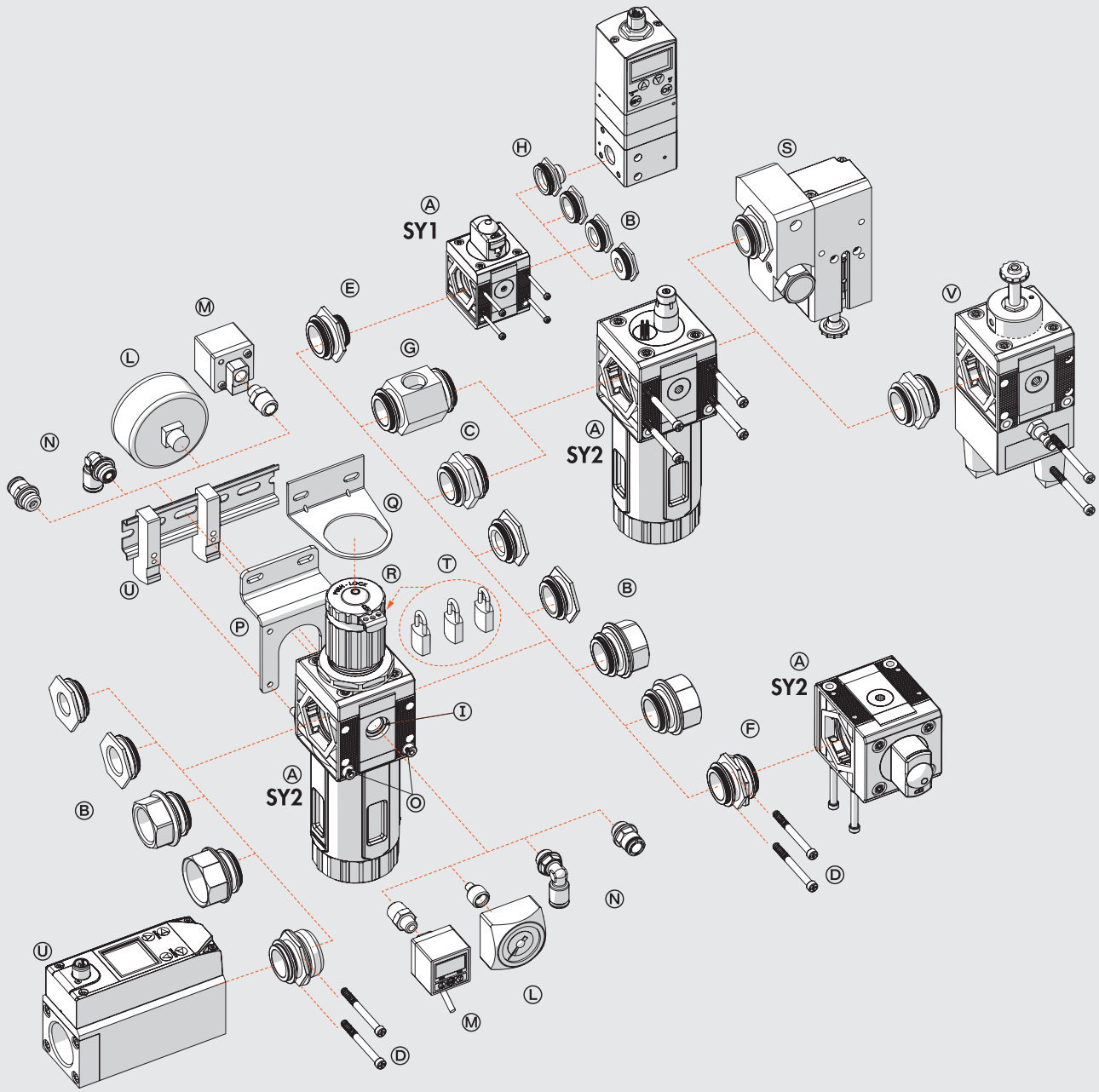

The various elements of Syntesi® Ⓐ can be connected to the air feed and delivery circuit using pneumatic nickel brass or passivated aluminium ports Ⓑ and can be fixed together using nipples Ⓒ.
The nipples and ports are easy to remove by unscrewing the two front screws Ⓓ. This solution has numerous advantages:
- Reduced overall dimensions.
- Free composition of multiple elements, without the need for brackets, stay bolts or yoke.
- The threads for the fittings are metallic, allowing high tightening torques, also for tapered threads.
- Maximum flexibility: a unit can be transformed at any time by adding an element or replacing a port with another one, e.g. 1/4" instead of 1/8".
- The air intake port can be the same or different from the outlet port, as desired.

Standard Syntesi® ports are: 1/8", 1/4", 3/8" for size 1; 3/8", 1/2", 3/4", 1" for size 2.
It may be necessary to use a vice to insert the bushes into size 2.
The nipples have different functions:
- Nipple Ⓒ joins two elements of the same size together.
- Size adaptor Ⓔ can be used to connect an element in the Syntesi® 2 series with one in the Syntesi® 1 series.
- The 90° adaptor Ⓕ can be used to connect two 90° angled elements. For example, it can help directing the regulator knob or the control knob of a sectioning valve towards the user.
- The two-way air intake Ⓖ is a simple and cost-effective system which, besides connecting two elements together, has 2 opposing threaded air intakes.
- The adaptor for Regtronic Ⓗ can be used to fix the Regtronic 1/4" proportional valve to a Syntesi® size 1 element.

Additional ports Ⓘ. On the front and back of ALL Syntesi® elements there is a port (1/8" for size 1, 1/4" for size 2) that can be used for pressure gauges Ⓛ, pressure switches Ⓜ or, given the high flow rate, as additional air take-off Ⓝ. These ports are downstream of the element, so, for example, a regulator port can supply air at a set pressure or a filter port can supply filtered air (not valid for activated carbon filter and depurator).
Wall fixing. Only two through screws Ⓞ are needed. No bulky brackets or additional flanges are required. The bracket Ⓟ can be used to separate the unit from the fixing wall, e.g. to mount a fitting to the rear port.
Fixing on a DIN EN50022 bar. Can be done using the bracket kit Ⓤ.
Regulator fixing bracket Ⓠ. Regulators and filter-regulators can also be fixed using a steel bracket Ⓠ that embraces the bell.
Padlockable knob Ⓡ. The knobs of regulators, filter-regulator and sectioning valves can all be padlocked. The steel plate is included in the supply. You can insert up to two 3 mm diameter padlocks Ⓣ on size 1 and three padlocks on size 2. As an alternative, the sectioning valve can have a steel plate suitable for a single 6 mm diameter padlock.
Safety valve. The unit can be equipped with a safety valve. For both sizes, valves from the 70 SAFE AIR® Ⓢ, series can be used, while the V3V valve from the SAFE AIR® Ⓥ, series, specifically designed for the Syntesi® series, is available only for size 2.
Flowmeter series FLUX 1-2 Ⓤ. The unit can incorporate a series FLUX 1 or FLUX 2 flow meter.

SYNTESI® KEY TO CODES

KEY TO CODES SINGLE ELEMENT

56	1	1	F	10	1
SYNTESI	**SIZE**	**THREADED INPUT CONNECTION**	**ELEMENT**	**TYPE**	**THREADED OUTPUT CONNECTION**
56 Syntesi **5X** Syntesi anti-corrosion	**1** Size 1 **2** Size 2	**0** Without bushing **1** 1/8″ port **2** 1/4″ port **3** 3/8″ port **0** Without bushing **3** 3/8″ port **4** 1/2″ port **5** 3/4″ port **6** 1″ port	**F** Filter **D** Depurator **C** Active carbon filter **R** Pressure regulator **B** Filter-regulator **L** Lubricator ● **V** Shut off valve ▲✚ **W** Shut off valve Safe Air® ▲ **A** Progressive starter ▲ **S** Pressure switches **P** Air take-off ▲■ **G** Syntronic	Varies from element to element	**0** Without bushing **1** 1/8″ port **2** 1/4″ port **3** 3/8″ port **0** Without bushing **3** 3/8″ port **4** 1/2″ port **5** 3/4″ port **6** 1″ port

● The anti-corrosion version of this element is only available in manual or pneumatic type.
▲ Not available in the anti-corrosion version.
✚ Not available in size 1.
■ Not available in size 2.

KEY TO CODES UNIT COMPOSED OF TWO OR THREE ELEMENTS

56	1	1	V	10	B	24	L	10	1
SYNTESI	**SIZE**	**THREADED INPUT CONNECTION**	**ELEMENT 1**	**TYPE**	**ELEMENT 2**	**TYPE**	**ELEMENT 3**	**TYPE**	**THREADED OUTPUT CONNECTION**
56 Syntesi **5X** Syntesi anti-corrosion	**1** Size 1 **2** Size 2	**1** 1/8″ port **2** 1/4″ port **3** 3/8″ port **3** 3/8″ port **4** 1/2″ port **5** 3/4″ port **6** 1″ port	**F** Filter **D** Depurator **C** Active carbon filter **R** Pressure regulator **B** Filter-regulator **L** Lubricator ● **V** Shut off valve ▲✚ **W** Shut off valve Safe Air® ▲ **A** Progressive starter ▲ **S** Pressure switches **P** Air take-off ▲■ **G** Syntronic	Varies from element to element	**F** Filter **D** Depurator **C** Active carbon filter **R** Pressure regulator **B** Filter-regulator **L** Lubricator ● **V** Shut off valve ▲✚ **W** Shut off valve Safe Air® ▲ **A** Progressive starter ▲ **S** Pressure switches **P** Air take-off ▲■ **G** Syntronic	Varies from element to element	**F** Filter **D** Depurator **C** Active carbon filter **R** Pressure regulator **B** Filter-regulator **L** Lubricator ● **V** Shut off valve ▲✚ **W** Shut off valve Safe Air® ▲ **A** Progressive starter ▲ **S** Pressure switches **P** Air take-off ▲■ **G** Syntronic	Varies from element to element	**1** 1/8″ port **2** 1/4″ port **3** 3/8″ port **3** 3/8″ port **4** 1/2″ port **5** 3/4″ port **6** 1″ port

● The anti-corrosion version of this element is only available in manual or pneumatic type.
▲ Not available in the anti-corrosion version.
✚ Not available in size 1.
■ Not available in size 2.

SYNTESi® FILTER

METAL WORK® PNEUMATIC

The job of the filter is to retain liquid or solid impurities present in the compressed air. The incoming air is moved by the centrifuge unit, so that liquid particles, which are heavier, are projected against the walls of the container and force to adhere to it. As they accumulate, the create drops that deposit on the bottom by gravity.
The remaining solid particles are held back by the porous filtering element.
The condensate is maintained in a quiet state to prevent the deposited impurities from re-entering the circulation. The condensate drains out through the drain cock provided.
The RMSA drain discharges when the pressure in the filter drops to zero. Alternatively the condensate can be drained by hand by pressing the button.
The RA drain discharges condensate from the container automatically whenever necessary, regardless of the pressure level.
The SAC tap drains the condensate only as the result **of sudden changes in compressed air requests**.
On the front and back there is a port (1/8" for size 1 and 1/4" forsize 2) that can be used with pressure gauges, pressure switches or as an additional filtered air intake.

TECHNICAL DATA		FIL SY1			FIL SY2			
Threaded port		1/8"	1/4"	3/8"	3/8"	1/2"	3/4"	1"
Degree of filtration	µm	5 (yellow) - output air purity class ISO8573-1: 3.7.4						
		20 (white) - output air purity class ISO8573-1: 4.7.4						
		50 (blue) - output air purity class ISO8573-1: 5.7.4						
Max. input pressure	bar	15			13			
	MPa	1.5			1.3			
	psi	217			188			
Flow rate at 6.3 bar (0.63 MPa; 91 psi) ΔP 0.5 bar (0.05 MPa; 7 psi)	Nl/min	900	1200	1300	3400	3800	3800	
	scfm	32	42	46	120	135	135	
Flow rate at 6.3 bar (0.63 MPa; 91 psi) ΔP 1 bar (0.1 MPa; 14 psi)	Nl/min	1300	1650	1750	4500	5200	5200	
	scfm	46	58	62	159	184	184	
Min/max temperature at 10 bar; 1 MPa; 145 psi	°C	From -10 to +50			From -10 to +50			
Weight	g	178	173	164	488	461	457	445
Condensate drain		RMSA: drain with manual condensate discharge and automatic discharge at zero pressure						
		RA: automatic drain with condensate discharge, independent of pressure and flow rate.						
		Version conveys the draining by inserting the pipe having internal diameter 6 mm in the lower port.						
		SAC: automatic drain with condensate discharge. **Operates by pressure drop – requires variable air take-offs.**						
		Note: **the maximum input pressure for the RA version must not exceed 10 bar**						
Fluid		Compressed air or other inert gases						
Condensate bowl capacity	cm^3	30			70			
Mounting position		Vertical			Vertical			
Port for additional air take-off		1/8", front and rear			1/4", front and rear			
Additional air take-off flow rate at 6.3 bar	Nl/min	500			1500			
(0.63 MPa; 91 psi) ΔP 1 bar (0.1 MPa; 14 psi)	scfm	18			53			

COMPONENTS

① Technopolymer filter body
② IN/OUT bushing made of OT58 nickel-plated brass or passivated aluminium for 3/4" - 1"
③ Technopolymer centrifuge
④ Sintered HDPE filter cartridge
⑤ Technopolymer screen
⑥ Drain (RMSA)
⑦ Technopolymer plate
⑧ NBR o-ring gaskets
⑨ Clear technopolymer bowl

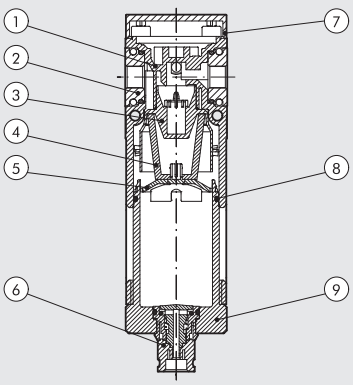

FLOW CHARTS

FIL Syntesi® **SY1** 1/8″

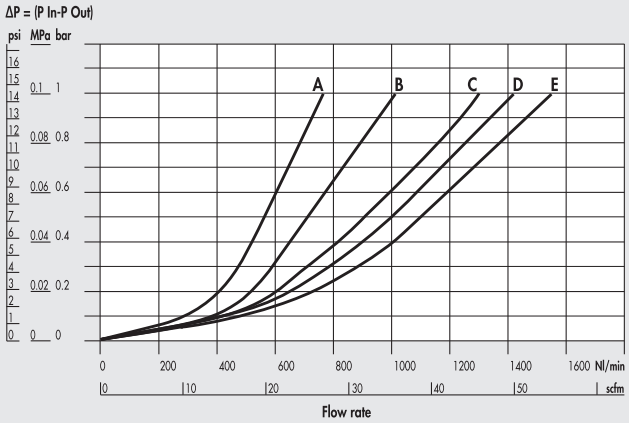

FIL Syntesi® **SY1** 1/4″

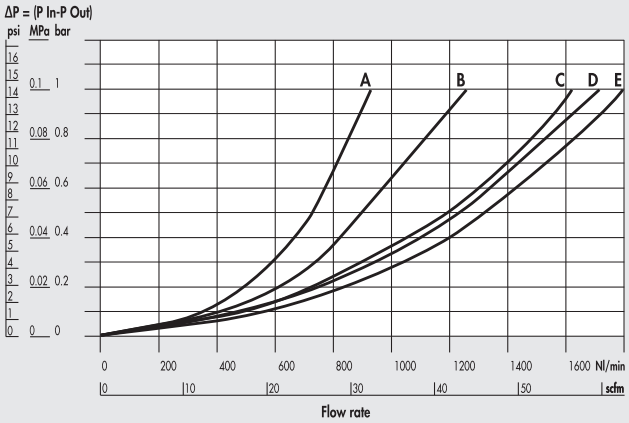

FIL Syntesi® **SY1** 3/8″

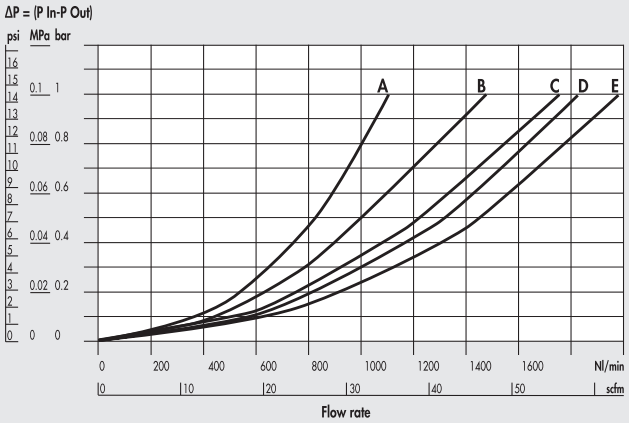

FIL Syntesi® **SY2** 3/8″

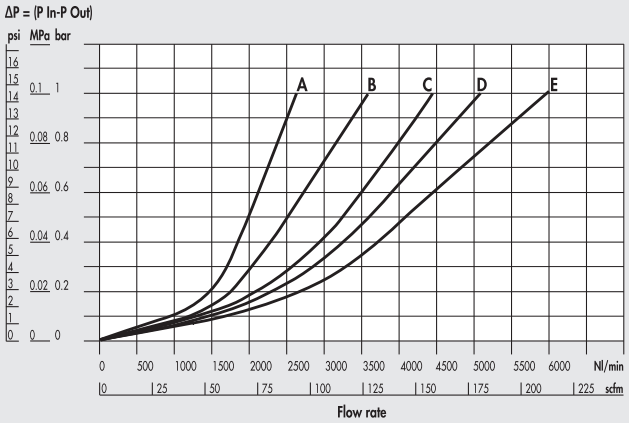

FIL Syntesi® **SY2** 1/2″

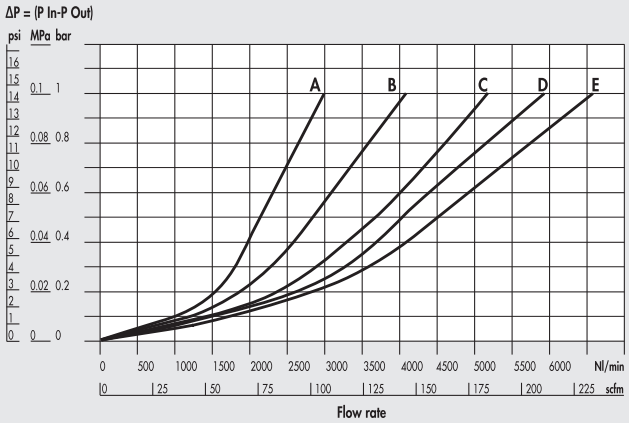

FIL Syntesi® **SY2** 3/4″-1″

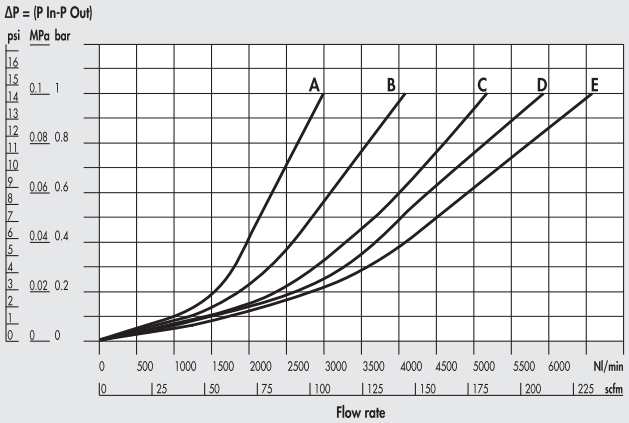

A = 2.5 bar - 0.25 MPa - 36 psi
B = 4 bar - 0.4 MPa - 58 psi
C = 6.3 bar - 0.63 MPa - 91 psi
D = 8 bar - 0.8 MPa - 116 psi
E = 10 bar - 1 MPa - 145 psi

METAL WORK PNEUMATIC

DIMENSIONS

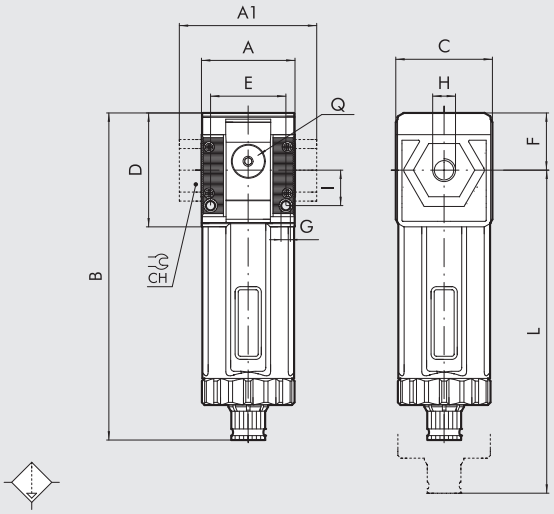

	SIZE 1			SIZE 2			
H (threaded port)	1/8″	1/4″	3/8″	3/8″	1/2″	3/4″	1″
A	42			60.5			
A1	-	-	44	-	-	95	95
B RMSA	148			178			
B RA/SAC	152			182			
C	44			61			
CH	-			-	-	32	36
D	51.5			70.5			
E	33.5			47.5			
F	25.8			38.2			
G	Hole for M4 screws			Hole for M5 screws			
I	16			22.5			
L RMSA	202			245			
L RA/SAC	206			249			
Q (no. 2 additional air takes-off)	1/8″			1/4″			

KEY TO CODES

56	1	1	F	10	1
SYNTESI	**SIZE**	**THREADED INPUT CONNECTION**	**ELEMENT**	**DEGREE OF FILTRATION AND TYPE OF CONDENSATE DRAIN**	**THREADED OUTPUT CONNECTION**
56 Syntesi	**1** Size 1	**0** Without bushing	**F** Filter	**10** 5 µm, RMSA	**0** Without bushing
5X Syntesi anti-corrosion		**1** 1/8″ port		**20** 20 µm, RMSA	**1** 1/8″ port
		2 1/4″ port		**30** 50 µm, RMSA	**2** 1/4″ port
		3 3/8″ port		**40** 5 µm, RA	**3** 3/8″ port
	2 Size 2	**0** Without bushing		**50** 20 µm, RA	**0** Without bushing
		3 3/8″ port		**60** 50 µm, RA	**3** 3/8″ port
		4 1/2″ port		**11** 5 µm, SAC	**4** 1/2″ port
		5 3/4″ port		**21** 20 µm, SAC	**5** 3/4″ port
		6 1″ port		**31** 50 µm, SAC	**6** 1″ port

RMSA: drain with manual condensate discharge and automatic discharge at zero pressure.

RA: automatic drain with condensate discharge, independent of pressure and flow rate. Version conveys the draining by inserting the pipe having internal diameter 6 mm in the lower port.

SAC: automatic drain with condensate discharge. **Operates by pressure drop – requires variable air take-offs.**

PURCHASE ORDER CODES HAVING A MORE FREQUENT USE

N.B. Besides the below mentioned codes, you can order elements composed at your will according to the key to codes.

Code	Description	Code	Description	Code	Description
Syntesi® SY1 FILTER		**Syntesi® SY2 FILTER**		**Syntesi® SY2 FILTER**	
5610F100	FIL SY1 5 RMSA without bushings	**5620F100**	FIL SY2 5 RMSA without bushings	**5626F106**	FIL SY2 1 5 RMSA
5610F200	FIL SY1 20 RMSA without bushings	**5620F200**	FIL SY2 20 RMSA without bushings	**5626F206**	FIL SY2 1 20 RMSA
5610F400	FIL SY1 5 RA without bushings	**5620F400**	FIL SY2 5 RA without bushings	**5626F406**	FIL SY2 1 5 RA
5610F500	FIL SY1 20 RA without bushings	**5620F500**	FIL SY2 20 RA without bushings	**5626F506**	FIL SY2 1 20 RA
5611F101	FIL SY1 1/8 5 RMSA	**5623F103**	FIL SY2 3/8 5 RMSA		
5611F201	FIL SY1 1/8 20 RMSA	**5623F203**	FIL SY2 3/8 20 RMSA		
5611F401	FIL SY1 1/8 5 RA	**5623F403**	FIL SY2 3/8 5 RA		
5611F501	FIL SY1 1/8 20 RA	**5623F503**	FIL SY2 3/8 20 RA		
5612F102	FIL SY1 1/4 5 RMSA	**5624F104**	FIL SY2 1/2 5 RMSA		
5612F202	FIL SY1 1/4 20 RMSA	**5624F204**	FIL SY2 1/2 20 RMSA		
5612F402	FIL SY1 1/4 5 RA	**5624F404**	FIL SY2 1/2 5 RA		
5612F502	FIL SY1 1/4 20 RA	**5624F504**	FIL SY2 1/2 20 RA		
5613F103	FIL SY1 3/8 5 RMSA	**5625F105**	FIL SY2 3/4 5 RMSA		
5613F203	FIL SY1 3/8 20 RMSA	**5625F205**	FIL SY2 3/4 20 RMSA		
5613F403	FIL SY1 3/8 5 RA	**5625F405**	FIL SY2 3/4 5 RA		
5613F503	FIL SY1 3/8 20 RA	**5625F505**	FIL SY2 3/4 20 RA		

NOTE

Anti-corrosion version

5X_ _ _ _ _ _

Example

5X11F101 FIL SY1 1/8 5 RMSA anti-corrosion

SYNTESI® DEPURATOR

The job of the filter purifier is to separate liquid and solid particles dispersed in the compressed air with a high degree of efficiency.
This separation is achieved by means of a special filtering element called a "coalescence cartridge".
It is particularly indicated for eliminating traces of oil present in the compressed air. The air flow rate must remain below the maximum values to achieve the desired degree of purification. Beyond this value, there may be a decline in the quality of air from the purifier.
On the front and back there is a port (1/8" for size 1 and 1/4" for size 2) that can be used with pressure gauges, pressure switches or as an additional air intake. **The air taken from here is not purified**.

TECHNICAL DATA		DEP SY1			DEP SY2			
Threaded port		1/8"	1/4"	3/8"	3/8"	1/2"	3/4"	1"
Degree of filtration	µm	0.01 - output air purity class ISO8573-1: 1.7.2						
		1 - output air purity class ISO8573-1: 3.7.3						
Max. input pressure	bar	15			13			
	MPa	1.5			1.3			
	psi	217			188			
Suggested flow rate at 6.3 bar (0.63 MPa; 91 psi)	Nl/min	460			620			
	scfm	9			37			
Maximun suggested flow rate		See graph on the next page						
		N.B.: flow rates higher than the recommended value reduces purification efficiency						
Min/max temperature at 10 bar; 1 MPa; 145 psi	°C	From -10 to +50			From -10 to +50			
Weight	g	194	189	180	483	456	452	440
Condensate drain		RMSA: drain with manual condensate discharge and automatic discharge at zero pressure						
		SAC: automatic drain with condensate discharge. **Operates by pressure drop – requires variable air take-offs**.						
Fluid		Compressed air or other inert gases						
Bowl capacity	cm^3	15			40			
Mounting position		Vertical			Vertical			
Port for additional air take-off (not purified air)		1/8", front and rear			1/4", front and rear			
Additional air take-off flow rate at 6.3 bar	Nl/min	500			1500			
(0.63 MPa; 91 psi) ΔP 1 bar (0.1 MPa; 14 psi)	scfm	18			53			
Wall fixing screws		No. 2 M4 screws			No. 2 M5 screws			
Notes on use		It is advisable to mount a 5 µm filter upstream of the purifier to retain solid particles						

COMPONENTS

① Technopolymer depurator body
② IN/OUT bushing made of OT58 nickel-plated brass or passivated aluminium for 3/4" - 1"
③ Coalescence cartridge
④ Technopolymer cartridge support
⑤ Drain (RMSA)
⑥ Technopolymer plate
⑦ NBR o-ring gaskets
⑧ Clear technopolymer bowl

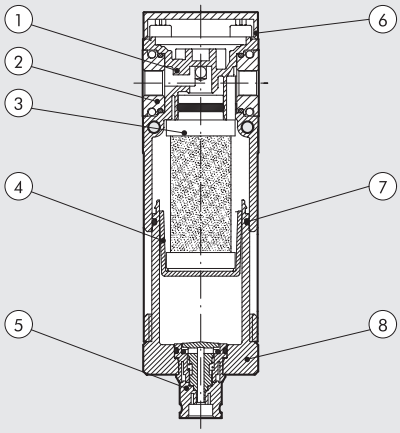

METAL WORK PNEUMATIC

HOW THE COALESCENCE CARTRIDGE WORKS

Air from the mains – full of impurities – flows into the coalescence cartridge and then passes through the crossed micro-fibres that make up the cartridge. During this movement the liquid particles come into contact with the crossed micro-fibres and adhere to them. Due to the air pressure and gravity they join up with other micro-drops at each cross-over point and gradually increase in volume, leading to the physical phenomenon called coalescence. When they stop moving, the drops deposit on the outside of the cartridge, from which they detach and drop to the bottom.
Since the volume of liquid leaving the cartridge is exactly the same as the drops arriving, the coalescence cartridge ought to work indefinitely. Solid particles are caught with the same efficiency but, unlike drops, they are not drained out and clog the cartridge. To get round this problem, it is necessary to mount a 5µm prefilter before the fine oil filter to separate the solid particles first.

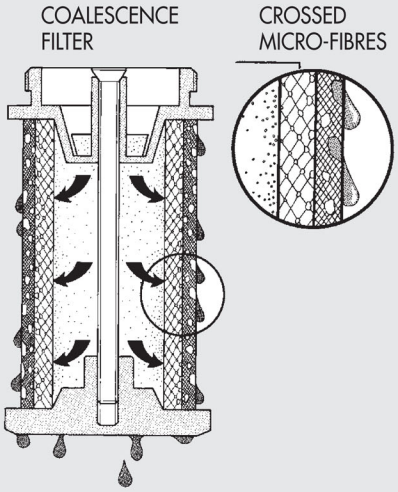

FLOW CHARTS

DEP Syntesi® **SY1** 1/8"

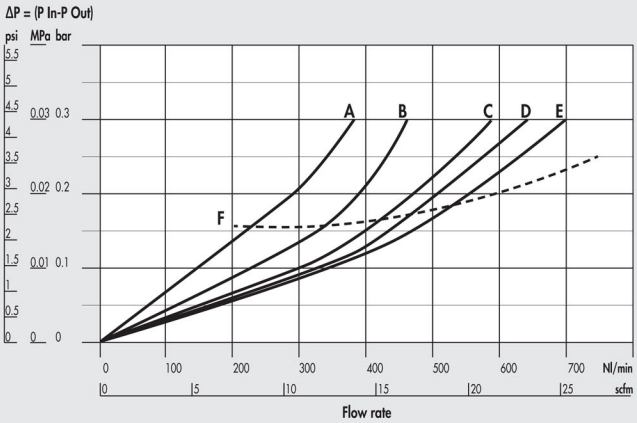

DEP Syntesi® **SY1** 1/4"

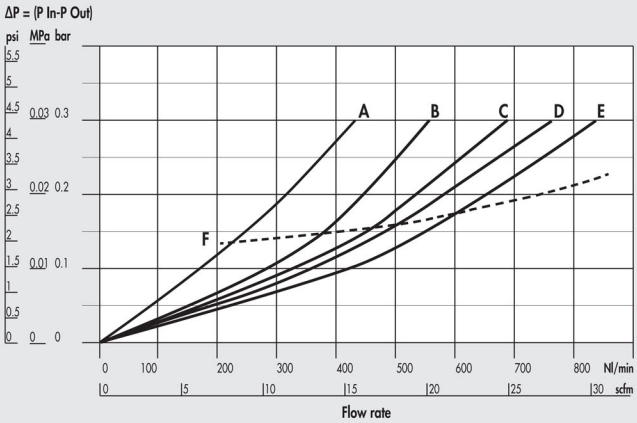

DEP Syntesi® **SY1** 3/8"

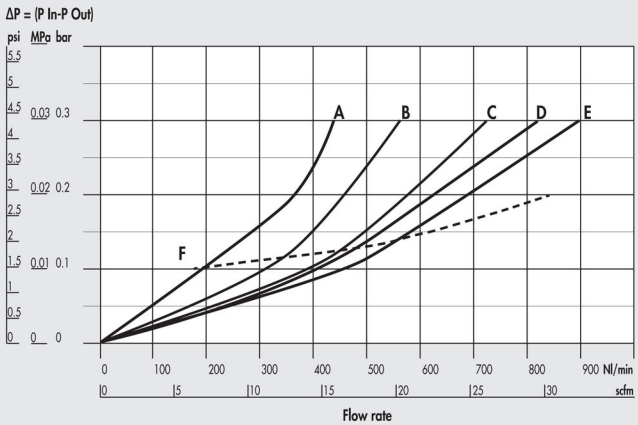

DEP Syntesi® **SY2** 3/8"

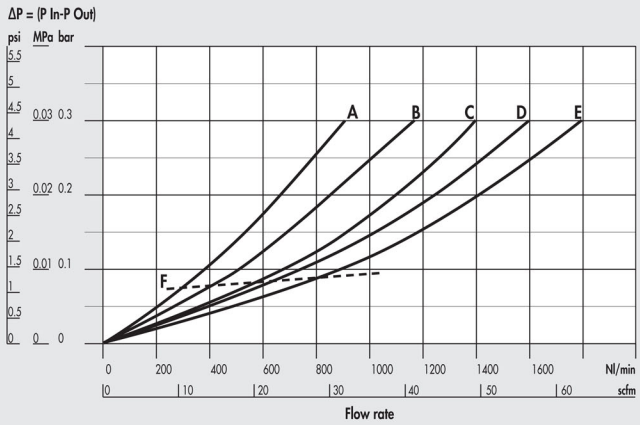

A = 2.5 bar - 0.25 MPa - 36 psi
B = 4 bar - 0.4 MPa - 58 psi
C = 6.3 bar - 0.63 MPa - 91 psi
D = 8 bar - 0.8 MPa - 116 psi
E = 10 bar - 1 MPa - 145 psi
F = max suggested flow

DEP Syntesi® **SY2** 1/2"

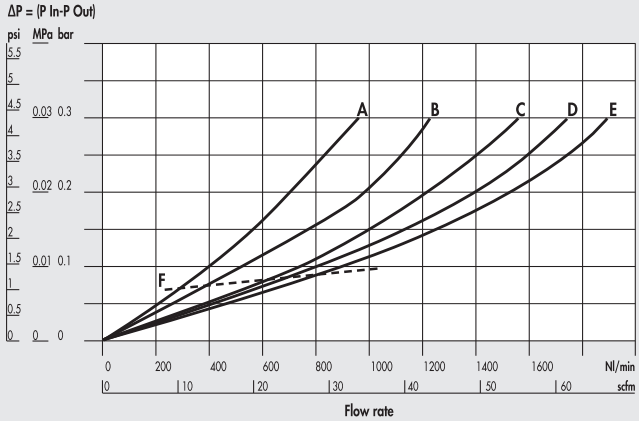

DEP Syntesi® **SY2** 3/4" - 1"

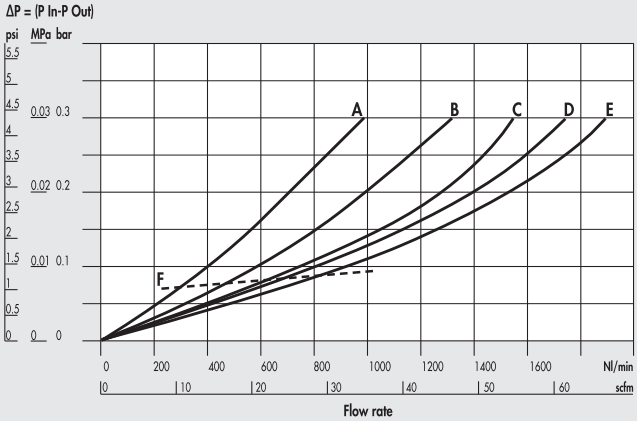

A = 2.5 bar - 0.25 MPa - 36 psi
B = 4 bar - 0.4 MPa - 58 psi
C = 6.3 bar - 0.63 MPa - 91 psi
D = 8 bar - 0.8 MPa - 116 psi
E = 10 bar - 1 MPa - 145 psi
F = max suggested flow

DIMENSIONS

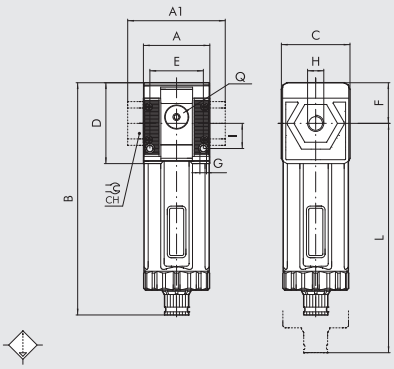

		SIZE 1			SIZE 2			
H (threaded port)		1/8"	1/4"	3/8"	3/8"	1/2"	3/4"	1"
A		42			60.5			
A1		-	-	44	-	-	95	95
B	RMSA	148			178			
	SAC	152			182			
C		44			61			
CH		-			-	-	32	36
D		51.5			70.5			
E		33.5			47.5			
F		25.8			38.2			
G		Hole for M4 screws			Hole for M5 screws			
I		16			22.5			
L	RMSA	202			245			
	SAC	206			249			
Q (no. 2 additional air takes-off)		1/8"			1/4"			

KEY TO CODES

56	1	1	D	10	1
SYNTESI	**SIZE**	**THREADED INPUT CONNECTION**	**ELEMENT**	**TYPE**	**THREADED OUTPUT CONNECTION**
56 Syntesi **5X** Syntesi anti-corrosion	**1** Size 1	**0** Without bushing **1** 1/8" port **2** 1/4" port **3** 3/8" port	**D** Depurator	**10** 0.01 µm RMSA **11** 0.01 µm SAC **30** 1 µm RMSA **31** 1 µm SAC	**0** Without bushing **1** 1/8" port **2** 1/4" port **3** 3/8" port
	2 Size 2	**0** Without bushing **3** 3/8" port **4** 1/2" port **5** 3/4" port **6** 1" port			**0** Without bushing **3** 3/8" port **4** 1/2" port **5** 3/4" port **6** 1" port

RMSA: drain with manual condensate discharge and automatic discharge at zero pressure.
SAC: automatic drain with condensate discharge.
Operates by pressure drop – requires variable air take-offs.

PURCHASE ORDER CODES HAVING A MORE FREQUENT USE

N.B. Besides the below mentioned codes, you can order elements composed at your will according to the key to codes.

Code	Description
Syntesi® SY1 DEPURATOR	
5610D100	DEP SY1 RMSA without bushings
5611D101	DEP SY1 1/8 RMSA
5612D102	DEP SY1 1/4 RMSA
5613D103	DEP SY1 3/8 RMSA

Code	Description
Syntesi® SY2 DEPURATOR	
5620D100	DEP SY2 RMSA without bushings
5623D103	DEP SY2 3/8 RMSA
5624D104	DEP SY2 1/2 RMSA
5625D105	DEP SY2 3/4 RMSA
5626D106	DEP SY2 1 RMSA

NOTE
Anti-corrosion version
5X_ _ _ _ _
Example
5X11D101 DEP SY1 1/8 RMSA anti-corrosion

SYNTESi® ACTIVE CARBON FILTER

METAL WORK® PNEUMATIC

Activated-carbon filtering systems achieve the highest standard of purification possible in industrial applications. They eliminate all traces of oils, solvents and hydrocarbons, and remove unpleasant odours.
The operating principle uses activated carbon, which absorbs most of the polluting particles in the air thanks to minute holes in the granules of carbon.
On the front and back there is a port (1/8" for size 1 and 1/4" for size 2) that can be used with pressure gauges, pressure switches or as an additional air intake. **The air taken from here is not filtered by the activated-carbon cartridge**.
Cartridge life and efficiency can be increased by using pre-filtered (5µm) and purified (0.01µm) air.
The cartridge must be replaced at set intervals as there is no difference in load loss between an efficient cartridge and a saturated one.
N.B.: to ensure the performance and duration stated on the data sheet, the load loss (ΔP) must not exceed 75 mbar.

TECHNICAL DATA		FIL CA SY1			FIL CA SY2			
Threaded port		1/8"	1/4"	3/8"	3/8"	1/2"	3/4"	1"
Residual oil at 20°C *	mg/m³	0.003 - output air purity class ISO8573-1: 1.7.1						
Duration of cartridge *	hours	4000			4000			
Max. inlet pressure	bar	15			13			
	MPa	1.5			1.3			
	psi	217			188			
Suggested flow rate at 6.3 bar (0.63 MPa; 91 psi)	Nl/min	350			800			
	scfm	12			28			
		N.B.: flow rates higher than the recommended value reduces purification efficiency						
Min/max temperature at 10 bar; 1 MPa; 145 psi	°C	From -10 to +50			From -10 to +50			
Weight	g	195	190	181	483	456	452	440
Condensate drain		RMSA: drain with manual condensate discharge and automatic discharge at zero pressure						
Fluid		0.01 µm filtred and depurated air						
Mounting position		In any position			In any position			
Additional air take-off port (unfiltered air from cartridge CA)		1/8", front and rear			1/4", front and rear			
Additional air take-off flow rate at 6.3 bar	Nl/min	500			1500			
(0.63 MPa; 91 psi) ΔP 1 bar (0.1 MPa; 14 psi)	scfm	18			53			
Wall fixing screws		No. 2 M4 screws			No. 2 M5 screws			
Notes on use		Upstream it's necessary to mount a coalescence filter depurator of 0.01µm.						
* if the load loss of 75 mbar is not exceeded								

COMPONENTS

① Technopolymer depurator body
② IN/OUT bushing made of OT58 nickel-plated brass or passivated aluminium for 3/4" - 1"
③ Active carbon cartridge
④ Technopolymer cartridge support
⑤ Drain (RMSA)
⑥ Technopolymer plate
⑦ NBR o-ring gasket
⑧ Clear technopolymer bowl

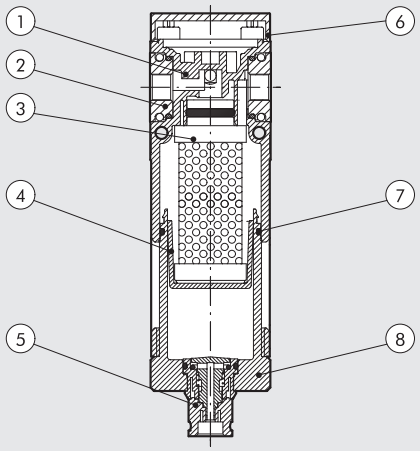

FLOW CHARTS

FIL CA Syntesi® **SY1** 1/8"

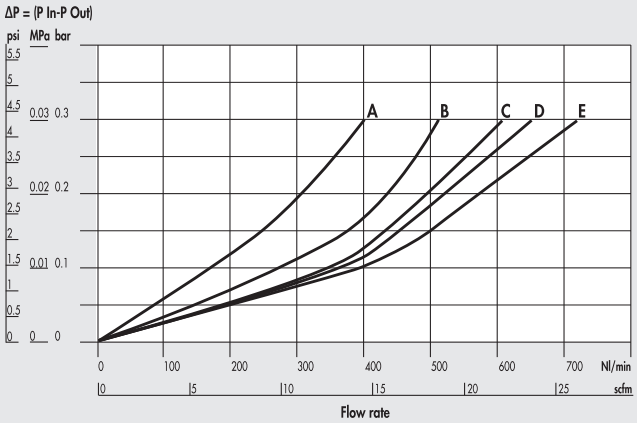

FIL CA Syntesi® **SY1** 1/4"

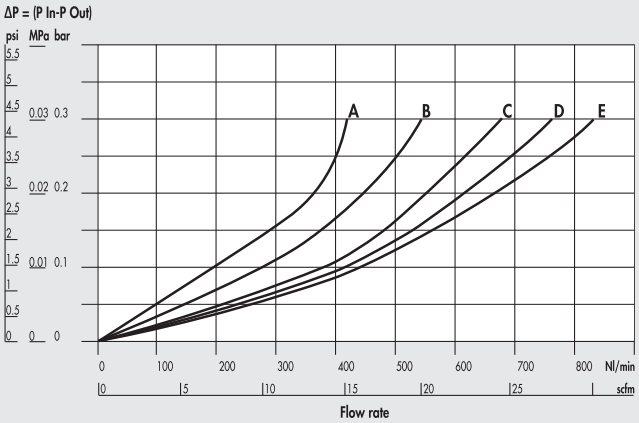

FIL CA Syntesi® **SY1** 3/8"

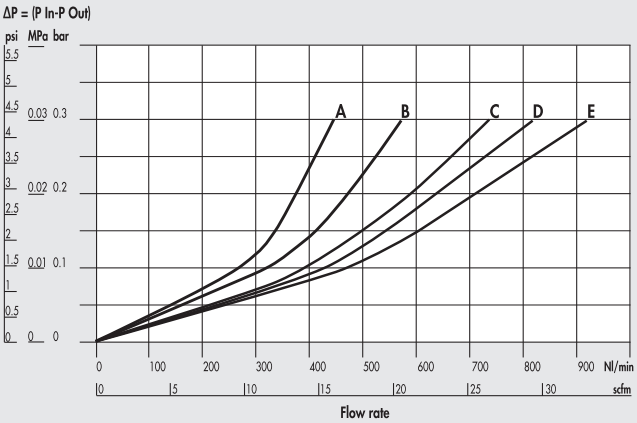

FIL CA Syntesi® **SY2** 3/8"

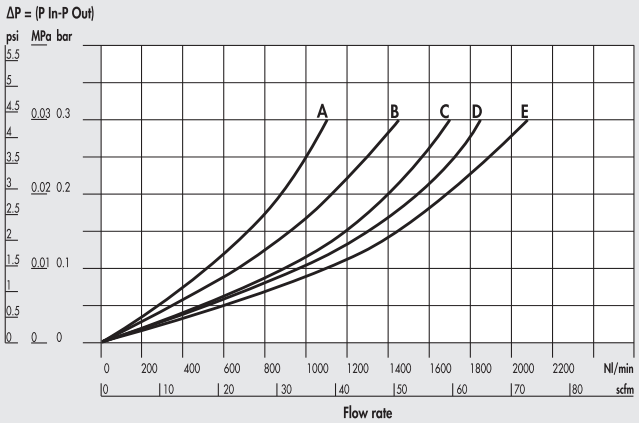

FIL CA Syntesi® **SY2** 1/2"

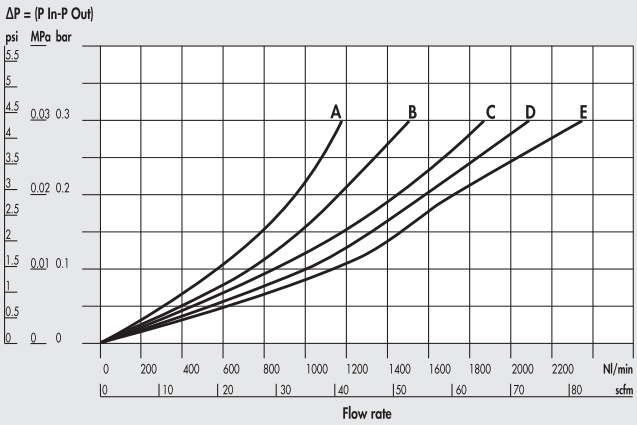

FIL CA Syntesi® **SY2** 3/4" - 1"

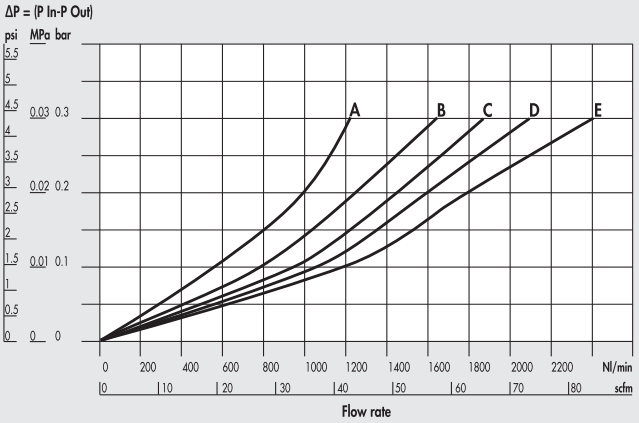

A = 2.5 bar - 0.25 MPa - 36 psi
B = 4 bar - 0.4 MPa - 58 psi
C = 6.3 bar - 0.63 MPa - 91 psi
D = 8 bar - 0.8 MPa - 116 psi
E = 10 bar - 1 MPa - 145 psi

METAL WORK PNEUMATIC

DIMENSIONS

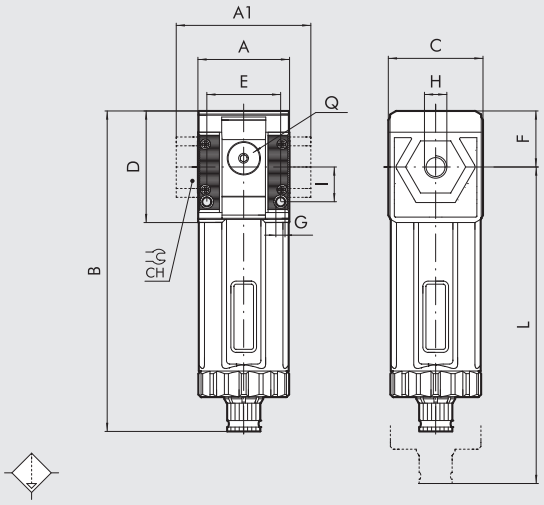

	SIZE 1			SIZE 2			
H (threaded port)	1/8″	1/4″	3/8″	3/8″	1/2″	3/4″	1″
A	42			60.5			
A1	-	-	44	-	-	95	95
B RMSA	148			178			
C	44			61			
CH	-			-	-	32	36
D	51.5			70.5			
E	33.5			47.5			
F	25.8			38.2			
G	Hole for M4 screws			Hole for M5 screws			
I	16			22.5			
L RMSA	202			245			
Q (no. 2 additional air takes-off)	1/8″			1/4″			

KEY TO CODES

56	1	1	C	10	1
SYNTESI	**SIZE**	**THREADED INPUT CONNECTION**	**ELEMENT**	**TYPE**	**THREADED OUTPUT CONNECTION**
56 Syntesi **5X** Syntesi anti-corrosion	**1** Size 1	**0** Without bushing **1** 1/8″ port **2** 1/4″ port **3** 3/8″ port	**C** Active carbon filter	**10** RMSA	**0** Without bushing **1** 1/8″ port **2** 1/4″ port **3** 3/8″ port
	2 Size 2	**0** Without bushing **3** 3/8″ port **4** 1/2″ port **5** 3/4″ port **6** 1″ port			**0** Without bushing **3** 3/8″ port **4** 1/2″ port **5** 3/4″ port **6** 1″ port

RMSA: Drain with manual condensate discharge and automatic discharge at zero pressure.

PURCHASE ORDER CODES HAVING A MORE FREQUENT USE

N.B. Besides the below mentioned codes, you can order elements composed at your will according to the key to codes.

Code	Description	Code	Description	NOTE	
FILTRO CARBONI ATTIVI Syntesi® SY1		**FILTRO CARBONI ATTIVI Syntesi® SY2**		**Anti-corrosion version**	
5610C100	AC SY1 RMSA without bushings	**5620C100**	AC SY2 RMSA without bushings	**5X**_ _ _ _ _ _	
5611C101	AC SY1 1/8 RMSA	**5623C103**	AC SY2 3/8 RMSA	**Example**	
5612C102	AC SY1 1/4 RMSA	**5624C104**	AC SY2 1/2 RMSA	**5X11C101**	AC SY1 1/8 RMSA anti-corrosion
5613C103	AC SY1 3/8 RMSA	**5625C105**	AC SY2 3/4 RMSA		
		5626C106	AC SY2 1 RMSA		

SYNTESi® REGULATOR

Syntesi® pressure regulator is based on the rolling diaphragm principle, which offers numerous advantages compared to systems using a flat diaphragm:

- Increased stroke, allowing wider valve aperture and hence greater flow rate.
- Decreased dynamic and pick-up friction, and hence quicker response and enhanced sensitivity.
- Greater accuracy in maintaining the pressure setting, both with both variable flow rates and different supply pressures.

The regulator includes a compensation system that keeps the pressure setting virtually constant, even when the upstream pressure changes. This is achieved mainly by the design of the valve, which is pneumatically balanced.
If the downstream pressure rises above the threshold value, the air is discharged (relief valve) until it drops below the maximum value.
A special device relieves downstream pressure rapidly when the upstream pressure drops to zero. This means the regulator can be positioned between a valve and a cylinder because the air can flow in both directions, towards the cylinder with regulated pressure, or return towards the valve during relief.
The knob is the push-lock type – once the pressure has been set, press it and it locks in position. In this position you can pull out the plate and attach two padlocks on size 1 or three padlocks on size 2 in order to avoid possible tampering. On the front and back there is a port (1/8″ for size 1 and 1/4″ size 2) that can be used with pressure gauges, pressure switches or as an additional regulated air intake.

TECHNICAL DATA		REG SY1			REG SY2			
Threaded port		1/8″	1/4″	3/8″	3/8″	1/2″	3/4″	1″
Max. inlet pressure	bar	15			13			
	MPa	1.5			1.3			
	psi	217			188			
Flow rate at 6.3 bar (0.63 MPa; 91 psi) ΔP 0.5 bar (0.05 MPa; 7 psi)	Nl/min	570	1600	2900	3000	4300	4700	
(inlet pressure 10 bar)	scfm	20	57	103	106	152	166	
Flow rate at 6.3 bar (0.63 MPa; 91 psi) ΔP 1 bar (0.1 MPa; 14 psi)	Nl/min	1200	2800	3350	5300	7400	7600	
(inlet pressure 10 bar)	scfm	42	99	119	188	261	267	
Relief valve flow rate at 6.3 bar (0.63 MPa; 91 psi)	Nl/min	70			100			
	scfm	2.5			3.5			
Min/max temperature at 10 bar; 1 MPa; 145 psi	°C	From -10 to +50			From -10 to +50			
Full outflow with zero inlet pressure		Included						
Padlockable knob		Included						
Upstream pressure compensation		Included, via balanced valve						
Weight	g	193	188	179	546	519	515	503
Fluid		Compressed air or other inert gases						
Mounting position		In any position						
Additional air take-off, for pressure gauges or fittings		1/8″, front and rear			1/4″, front and rear			
Additional air take-off flow rate at 6.3 bar	Nl/min	500			1400			
(0.63 MPa; 91 psi) ΔP 1 bar (0.1 MPa; 14 psi)	scfm	18			50			
Wall fixing screws		No. 2 M4 screws			No. 2 M5 screws			
Notes on use		The pressure must always be set upwards. For increased sensitivity, use a pressure regulator with a rated pressure as close as possible to the required value. On request version without overpressure exaust						

METAL WORK PNEUMATIC

COMPONENTS

① Technopolymer adjusting knob
② Technopolymer bell
③ Steel adjusting spring (with Geomet® treatment for anti-corrosion version)
④ Technopolymer flange
⑤ Rolling diaphragm
⑥ IN/OUT bushing made of OT58 nickel-plated brass or passivated aluminium for 3/4″ - 1″
⑦ Technopolymer regulator body
⑧ OT58 brass valve, with NBR vulcanized gasket
⑨ Stainless steel valve spring
⑩ Zinc-plated steel plate for knob locking (stainless steel for anti-corrosion version)
⑪ OT58 brass adjusting screw
⑫ Technopolymer ring nut
⑬ Technopolymer plate
⑭ Technopolymer rod
⑮ NBR o-ring gasket
⑯ Technopolymer plug

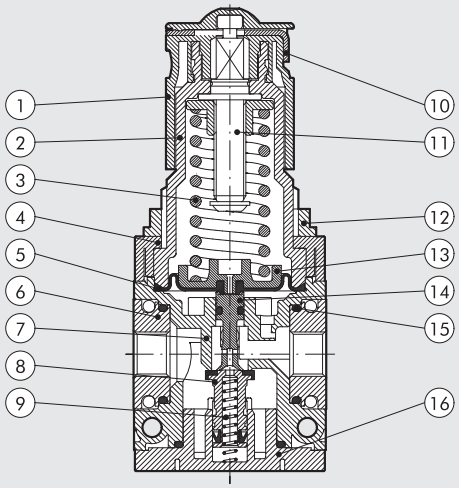

FLOW CHARTS

REG Syntesi® **SY1** 1/8″

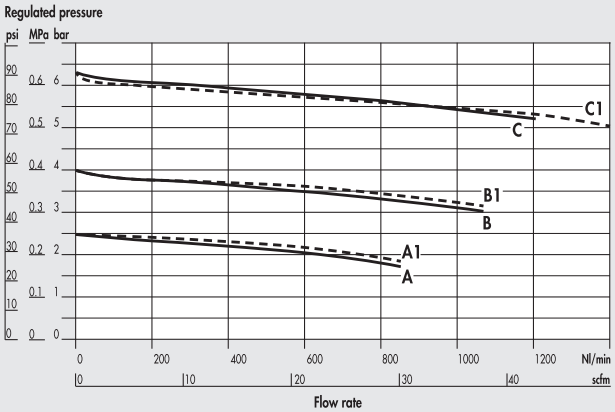

REG Syntesi® **SY1** 1/4″

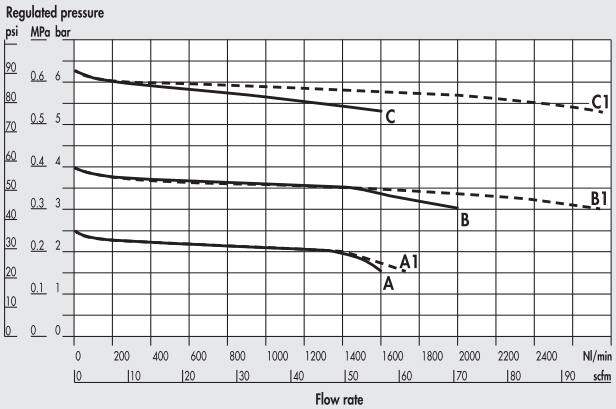

REG Syntesi® **SY1** 3/8″

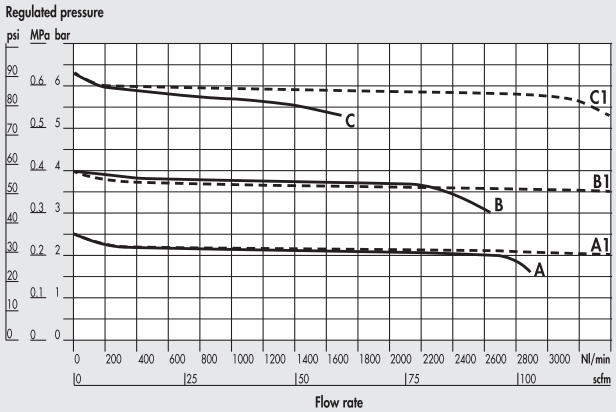

REG Syntesi® **SY2** 3/8″

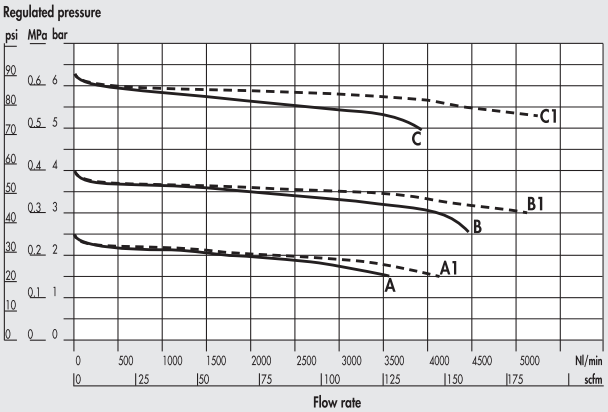

A = P In 7 bar - P Out 2.5 bar
B = P In 7 bar - P Out 4 bar
C = P In 7 bar - P Out 6.3 bar
A1 = P In 10 bar - P Out 2.5 bar
B1 = P In 10 bar - P Out 4 bar
C1 = P In 10 bar - P Out 6.3 bar

REG Syntesi® **SY2** 1/2″

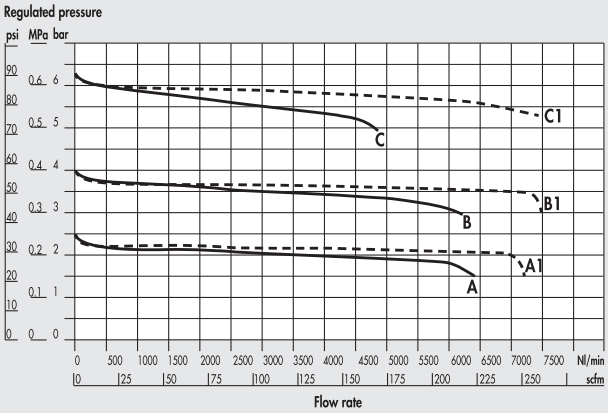

REG Syntesi® **SY2** 3/4″ - 1″

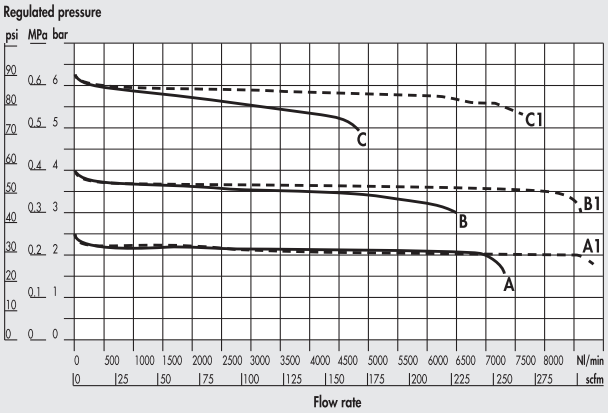

A = P In 7 bar - P Out 2.5 bar
B = P In 7 bar - P Out 4 bar
C = P In 7 bar - P Out 6.3 bar
A1 = P In 10 bar - P Out 2.5 bar
B1 = P In 10 bar - P Out 4 bar
C1 = P In 10 bar - P Out 6.3 bar

DIMENSIONS

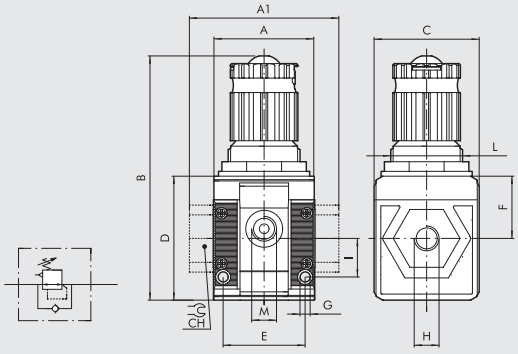

	SIZE 1			SIZE 2			
H (threaded port)	1/8″	1/4″	3/8″	3/8″	1/2″	3/4″	1″
A	42			60.5			
A1	-	-	44	-	-	95	95
B	102			139			
C	44			61			
CH	-			-	-	32	36
D	51.5			70.5			
E	33.5			47.5			
F	25.8			38.2			
G	Hole for M4 screws			Hole for M5 screws			
I	16			22.5			
L	M30x1.5			M38x2			
M (pressure gauge port or air takes-off)	1/8″			1/4″			

KEY TO CODES

56	1	1	R	14	1
SYNTESI	**SIZE**	**THREADED INPUT CONNECTION**	**ELEMENT**	**SETTING RANGE**	**THREADED OUTPUT CONNECTION**
56 Syntesi	**1** Size 1	**0** Without bushing	**R** Pressure regulator	● **10** 0 to 2 bar	**0** Without bushing
5X Syntesi anti-corrosion		**1** 1/8″ port		✚ **12** 0 to 4 bar	**1** 1/8″ port
		2 1/4″ port		**14** 0 to 8 bar	**2** 1/4″ port
		3 3/8″ port		**16** 0 to 12 bar	**3** 3/8″ port
	2 Size 2	**0** Without bushing			**0** Without bushing
		3 3/8″ port			**3** 3/8″ port
		4 1/2″ port			**4** 1/2″ port
		5 3/4″ port			**5** 3/4″ port
		6 1″ port			**6** 1″ port

● Not available in the anti-corrosion version. ✚ Anti-corrosion version available only in size 1.

PURCHASE ORDER CODES HAVING A MORE FREQUENT USE

N.B. Besides the below mentioned codes, you can order elements composed at your will according to the key to codes.

Code	Description	Code	Description	Code	Description
Syntesi® SY1 REGULATOR		**Syntesi® SY2 REGULATOR**		**Syntesi® SY2 REGULATOR**	
5610R140	REG SY1 08 without bushings	**5620R140**	REG SY2 08 without bushings	**5626R146**	REG SY2 1 08
5610R160	REG SY1 012 without bushings	**5620R160**	REG SY2 012 without bushings	**5626R166**	REG SY2 1 012
5611R141	REG SY1 1/8 08	**5623R143**	REG SY2 3/8 08		
5611R161	REG SY1 1/8 012	**5623R163**	REG SY2 3/8 012	**NOTE**	
5612R142	REG SY1 1/4 08	**5624R144**	REG SY2 1/2 08	**Anti-corrosion version**	
5612R162	REG SY1 1/4 012	**5624R164**	REG SY2 1/2 012	**5X**_ _ _ _ _ _	
5613R143	REG SY1 3/8 08	**5625R145**	REG SY2 3/4 08	**Example**	
5613R163	REG SY1 3/8 012	**5625R165**	REG SY2 3/4 012	**5X11R141**	REG SY1 1/8 08 anti-corrosion

SYNTESI® IN-SERIES REGULATOR

METAL WORK® PNEUMATIC

The in-series regulator is used to take air at a set pressure from the ports on the front and back of the body, while the pneumatic inlet and outlet ports are connected directly.
It is possible for instance to assemble several regulators side by side, all supplied at the same pressure, and obtain different regulated pressures, regardless of the pressure of the previous module.
The in-series regulator uses the same construction principles as the standard regulator, so the advantages are the same, such as compensation for upstream pressure changes, relief valve, rapid relief of the downstream pressure and a padlockable push-lock knob.

TECHNICAL DATA		IN-SERIES REGULATOR SY1			IN-SERIES REGULATOR SY2			
Threaded inlet port, through		1/8″	1/4″	3/8″	3/8″	1/2″	3/4″	1″
Utility threaded port		1/8″			1/4″			
Max. input pressure	bar	15			13			
	MPa	1.5			1.3			
	psi	217			188			
Flow rate at 6.3 bar (0.63 MPa; 91 psi) ΔP 0.5 bar (0.05 MPa; 7 psi)	Nl/min	330			540			
	scfm	12			19			
Flow rate at 6.3 bar (0.63 MPa; 91 psi) ΔP 1 bar (0.1 MPa; 14 psi)	Nl/min	500			1000			
	scfm	18			35			
Relief valve flow rate at 6.3 bar (0.63 MPa; 91 psi)	Nl/min	70			100			
	scfm	2.5			3.5			
Min/max temperature at 10 bar; 1 MPa; 145 psi	°C	From -10 to +50			From -10 to +50			
Full outflow with zero inlet pressure		Included						
Padlockable knob		Included						
Upstream pressure compensation		Included, via balanced valve						
Weight	g	193	188	179	546	519	515	503
Fluid		Compressed air or other inert gases						
Mounting position		In any position						
Wall fixing screws		No. 2 M4 screws			No. 2 M5 screws			
Notes on use		The pressure must always be set upwards. For increased sensitivity, use a pressure regulator with a rated pressure as close as possible to the required value. On request version without overpressure exhaust						

COMPONENTS

① Technopolymer adjusting knob
② Technopolymer bell
③ Steel adjusting spring (with Geomet® treatment for anti-corrosion version)
④ Technopolymer flange
⑤ Rolling diaphragm
⑥ IN/OUT bushing made of OT58 nickel-plated brass or passivated aluminium for 3/4″ - 1″
⑦ Technopolymer body
⑧ OT58 brass valve, with NBR vulcanized gasket
⑨ Stainless steel valve spring
⑩ Zinc-plated steel plate for knob locking (stainless steel for anti-corrosion version)
⑪ OT58 brass adjusting screw
⑫ Technopolymer ring nut
⑬ Technopolymer plate
⑭ Technopolymer rod
⑮ NBR o-ring gaskets
⑯ Technopolymer plug

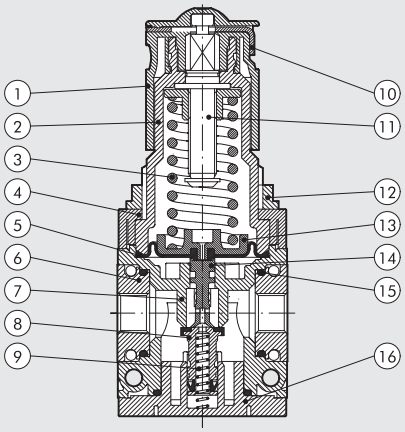

FLOW CHARTS

IN-SERIES REGULATOR Syntesi® **SY1** 1/4″-1/8″-3/8″

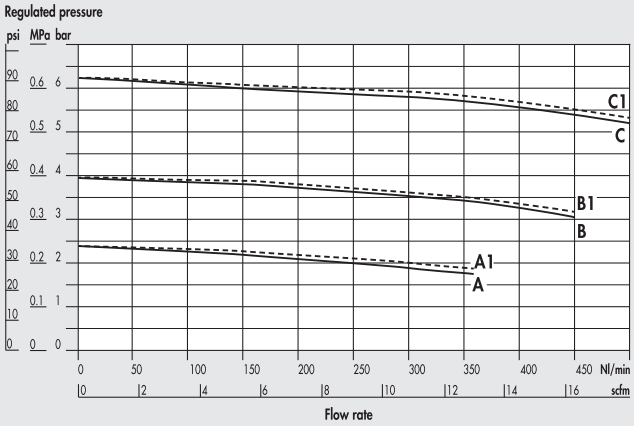

IN-SERIES REGULATOR Syntesi® **SY2** 3/8″ - 1/2″ - 3/4″ - 1″

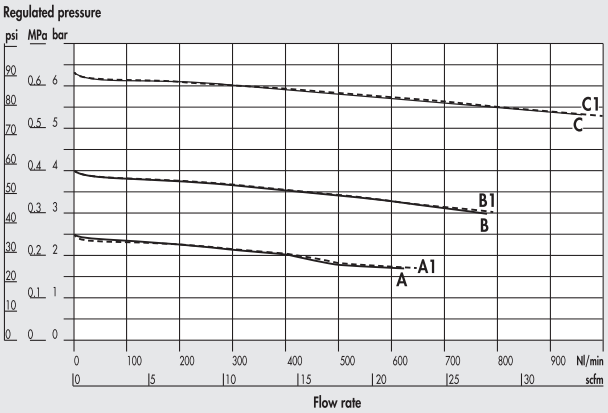

A = P In 7 bar - P Out 2.5 bar
B = P In 7 bar - P Out 4 bar
C = P In 7 bar - P Out 6.3 bar

A1 = P In 10 bar - P Out 2.5 bar
B1 = P In 10 bar - P Out 4 bar
C1 = P In 10 bar - P Out 6.3 bar

DIMENSIONS

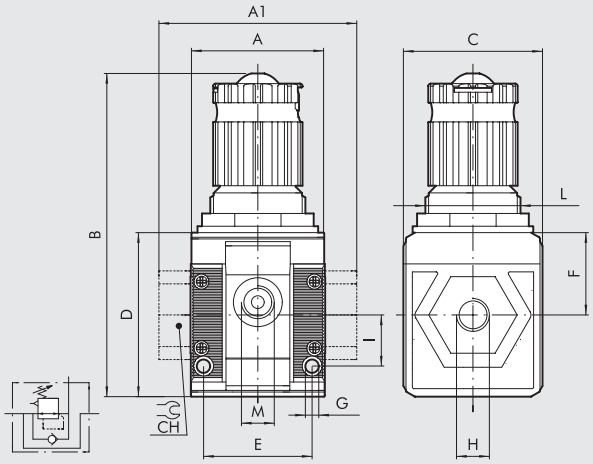

	SIZE 1			SIZE 2			
H (threaded port)	1/8″	1/4″	3/8″	3/8″	1/2″	3/4″	1″
A	42			60.5			
A1	-	-	44	-	-	95	95
B	102			139			
C	44			61			
CH	-			-	-	32	36
D	51.5			70.5			
E	33.5			47.5			
F	25.8			38.2			
G	Hole for M4 screws			Hole for M5 screws			
I	16			22.5			
L	M30x1.5			M38x2			
M (use)	1/8″			1/4″			

FUNCTION DIAGRAM

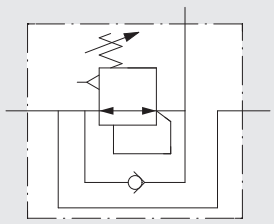

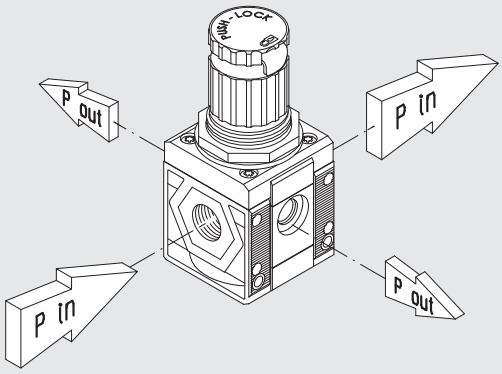

METAL WORK PNEUMATIC

KEY TO CODES

56	1	1	R	24	1
SYNTESI	**SIZE**	**THREADED INPUT CONNECTION**	**ELEMENT**	**IN-SERIES REGULATOR SETTING RANGE**	**THREADED OUTPUT CONNECTION**
56 Syntesi	**1** Size 1	**0** Without bushing	**R** Pressure regulator	● **20** 0 to 2 bar	**0** Without bushing
5X Syntesi anti-corrosion		**1** 1/8″ port		✚ **22** 0 to 4 bar	**1** 1/8″ port
		2 1/4″ port		**24** 0 to 8 bar	**2** 1/4″ port
		3 3/8″ port		**26** 0 to 12 bar	**3** 3/8″ port
	2 Size 2	**0** Without bushing			**0** Without bushing
		3 3/8″ port			**3** 3/8″ port
		4 1/2″ port			**4** 1/2″ port
		5 3/4″ port			**5** 3/4″ port
		6 1″ port			**6** 1″ port

● Not available in the anti-corrosion version. ✚ Anti-corrosion version available only in size 1.

PURCHASE ORDER CODES HAVING A MORE FREQUENT USE

N.B. Besides the below mentioned codes, you can order elements composed at your will according to the key to codes.

Code	Description
Syntesi® SY1 IN-SERIES REGULATOR	
5610R240	In-series REG SY1 08 without bushings
5610R260	In-series REG SY1 012 without bushings
5611R241	In-series REG SY1 1/8 08
5611R261	In-series REG SY1 1/8 012
5612R242	In-series REG SY1 1/4 08
5612R262	In-series REG SY1 1/4 012
5613R243	In-series REG SY1 3/8 08
5613R263	In-series REG SY1 3/8 012

Code	Description
Syntesi® SY2 IN-SERIES REGULATOR	
5620R240	In-series REG SY2 08 without bushings
5620R260	In-series REG SY2 012 without bushings
5623R243	In-series REG SY2 3/8 08
5623R263	In-series REG SY2 3/8 012
5624R244	In-series REG SY2 1/2 08
5624R264	In-series REG SY2 1/2 012
5625R245	In-series REG SY2 3/4 08
5625R265	In-series REG SY2 3/4 012
5626R246	In-series REG SY2 1 08
5626R266	In-series REG SY2 1 012

NOTE

Anti-corrosion version

5X_ _ _ _ _ _

Example

5X11R241 In-series REG SY1 1/8 08 anti-corrosion

NOTES

SYNTESI® PILOT OPERATED REGULATOR

The pilot operated regulator can adjust pressure remotely via a pneumatic command.
The two rolling diaphragms offer several advantages:
- increased stroke, which allows greater opening of the valve and hence increased flow rate;
- reduced dynamic and pickup friction, which results in increased response speed and high sensitivity;
- high precision in maintaining the set pressure, both with variable flow rates and different inlet pressures.

The design features the same construction characteristics as those used for a standard regulator, so the advantages are the same, namely: compensation of the regulated pressure varies with the upstream pressure; presence of a relieving valve and downstream pressure quick relieving.

TECHNICAL DATA		REG SY1			REG SY2			
Threaded port		1/8"	1/4"	3/8"	3/8"	1/2"	3/4"	1"
Max. inlet pressure	bar	15			13			
	MPa	1.5			1.3			
	psi	217			188			
Flow rate at 6.3 bar (0.63 MPa; 91 psi) ΔP 0.5 bar (0.05 MPa; 7 psi)	Nl/min	900	1700	3300	5500	5500	7300	
(inlet pressure 10 bar)	scfm	32	60	116	194	194	258	
Flow rate at 6.3 bar (0.63 MPa; 91 psi) ΔP 1 bar (0.1 MPa; 14 psi)	Nl/min	1000	2800	3550	6800	6800	7700	
(inlet pressure 10 bar)	scfm	53	99	120	240	240	272	
Relief valve flow rate at 6.3 bar (0.63 MPa; 91 psi)	Nl/min	70			100			
	scfm	2.5			3.5			
Min/max temperature at 10 bar; 1 MPa; 145 psi	°C	From -10 to +50			From -10 to +50			
Full outflow with zero inlet pressure		Included						
Upstream pressure compensation		Included, via balanced valve						
Weight	g	149	144	135	456	429	425	413
Fluid		Compressed air or other inert gases						
Mounting position		In any position						
Additional air take-off, for pressure gauges or fittings		1/8", front and rear			1/4", front and rear			
Additional air take-off flow rate at 6.3 bar		500			1400			
(0.63 MPa; 91 psi) ΔP 1 bar (0.1 MPa; 14 psi)		18			50			
Wall fixing screws		No. 2 M4 screws			No. 2 M5 screws			
Notes on use		The pressure must always be set upwards.						

COMPONENTS

① Anodized aluminium plate
② Anodized aluminium diaphragm washer
③ Anodized aluminium upper cap
④ Technopolymer flange
⑤ Rolling diaphragm
⑥ IN/OUT bushing made of OT58 nickel-plated brass or passivated aluminium for 3/4" - 1"
⑦ Technopolymer regulator body
⑧ OT58 brass valve, with NBR vulcanized gasket
⑨ Stainless steel valve spring
⑩ Technopolymer rod
⑪ NBR o-ring gasket
⑫ Technopolymer plug

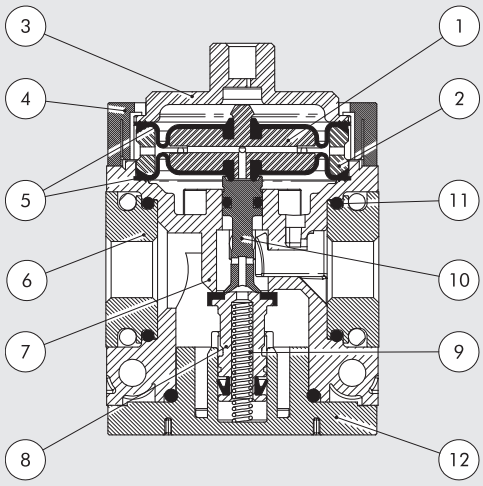

METAL WORK PNEUMATIC

FLOW CHARTS

REG PIL Syntesi® **SY1** 1/8″

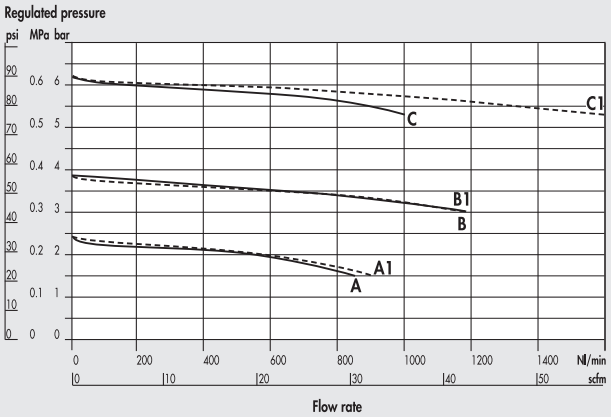

REG PIL Syntesi® **SY1** 1/4″

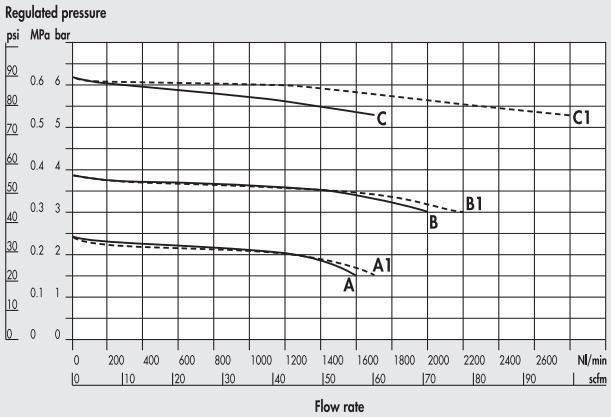

REG PIL Syntesi® **SY1** 3/8″

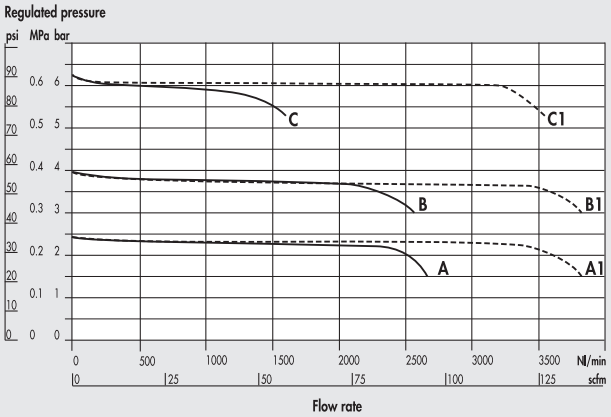

REG PIL Syntesi® **SY2** 3/8″

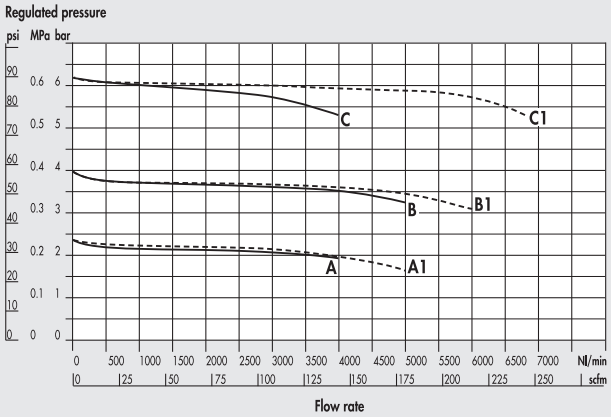

REG PIL Syntesi® **SY2** 1/2″

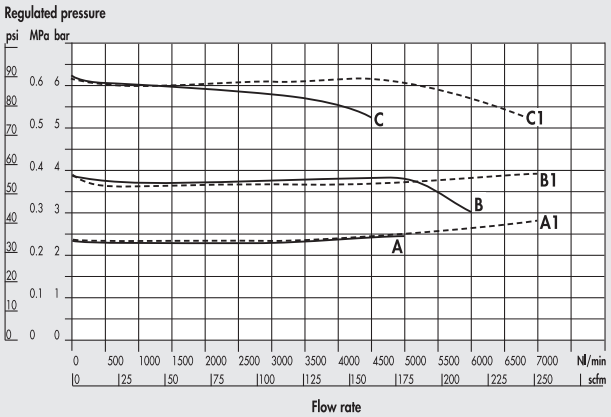

REG PIL Syntesi® **SY2** 3/4″ - 1″

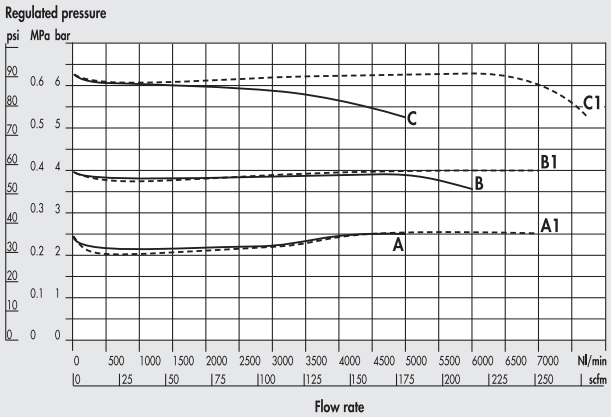

A = P In 7 bar - P Out 2.5 bar
B = P In 7 bar - P Out 4 bar
C = P In 7 bar - P Out 6.3 bar

A1 = P In 10 bar - P Out 2.5 bar
B1 = P In 10 bar - P Out 4 bar
C1 = P In 10 bar - P Out 6.3 bar

PILOTING CURVES

REG PIL Syntesi® **SY1**

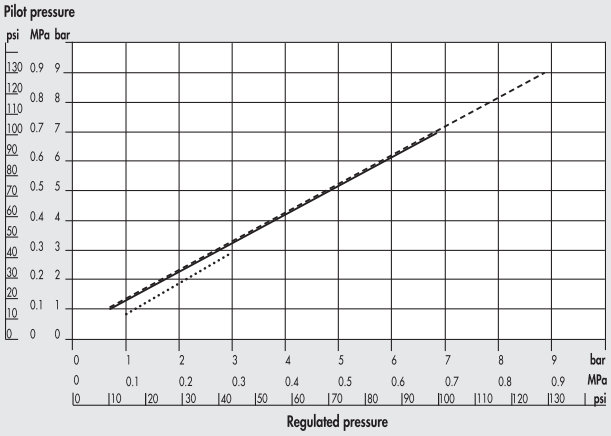

REG PIL Syntesi® **SY2**

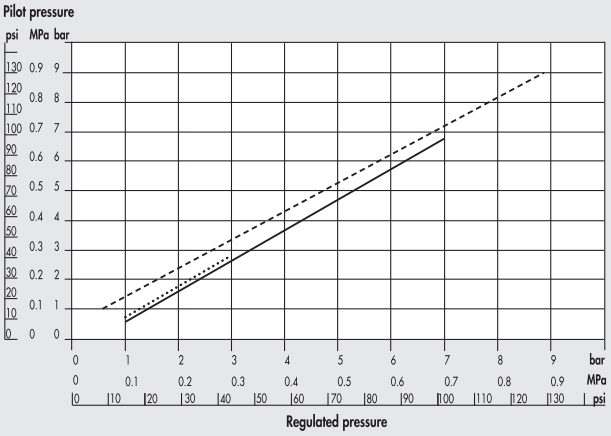

..... P In 4 bar ———— P In 7 bar ---------- P In 10 bar

DIMENSIONS

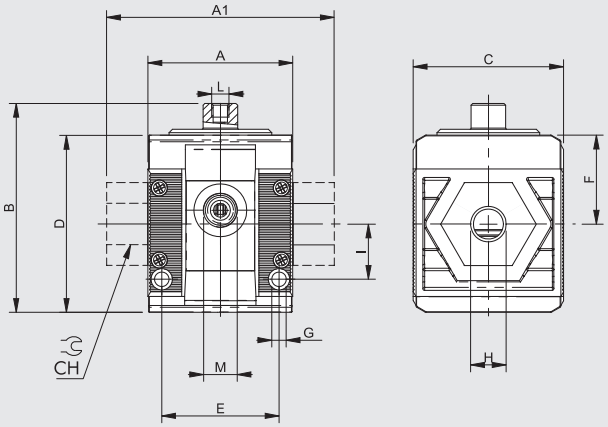

	SIZE 1			SIZE 2			
H (threaded port)	1/8″	1/4″	3/8″	3/8″	1/2″	3/4″	1″
A	42			60.5			
A1	-	-	44	-	-	95	95
B	63			81			
C	44			61			
CH	-			-	-	32	36
D	51.5			70.5			
E	33.5			47.5			
F	25.8			38.2			
G	Hole for M4 screws			Hole for M5 screws			
I	16			22.5			
L (pilot)	M5			M5			
M (pressure gauge port or air takes-off)	1/8″			1/4″			

KEY TO CODES

56	1	1	R	00	1
SYNTESI	SIZE	THREADED INPUT CONNECTION	ELEMENT	SETTING RANGE	THREADED OUTPUT CONNECTION
56 Syntesi **5X** Syntesi anti-corrosion	**1** Size 1 **2** Size 2	**0** Without bushing **1** 1/8″ port **2** 1/4″ port **3** 3/8″ port **0** Without bushing **3** 3/8″ port **4** 1/2″ port **5** 3/4″ port **6** 1″ port	**R** Pressure regulator	**00** Pilot operated	**0** Without bushing **1** 1/8″ port **2** 1/4″ port **3** 3/8″ port **0** Without bushing **3** 3/8″ port **4** 1/2″ port **5** 3/4″ port **6** 1″ port

METAL WORK PNEUMATIC

PURCHASE ORDER CODES HAVING A MORE FREQUENT USE

N.B. Besides the below mentioned codes, you can order elements composed at your will according to the key to codes.

Code	Description	Code	Description	NOTE	
Syntesi® SY1 PILOT OPERATED REGULATOR		**Syntesi® SY2 PILOT OPERATED REGULATOR**		**Anti-corrosion version**	
5610R000	REG PIL SY1 without bushings	**5620R000**	REG PIL SY2 without bushings	**5X**_ _ _ _ _ _	
5611R001	REG PIL SY1 1/8	**5623R003**	REG PIL SY2 3/8	**Example**	
5612R002	REG PIL SY1 1/4	**5624R004**	REG PIL SY2 1/2	**5X11R001**	REG PIL SY1 1/8 anti-corrosion
5613R003	REG PIL SY1 3/8	**5625R005**	REG PIL SY2 3/4		
		5626R006	REG PIL SY2 1		

NOTES

SYNTESI® FILTER-REGULATOR

This device combines in a single unit the functions of filtration, condensate separation and pressure regulation.
It is made up of the same elements forming the filter and the regulator, so the performance and advantages are the same:

- Separation of condensate and larger liquid and solid particles by centrifugation.
- Three condensate drain options (RMSA, RA and SAC).
- 360° visually inspection of the condensate level, via transport spy-holes.
- Rolling diaphragm regulator, allowing maximum precision and flow rate, and minimal friction.
- Compensation for upstream pressure changes.
- Pressure relief valve.
- Quick downstream pressure relief.
- Padlockable push-lock knob.
- Front and rear ports for pressure gauges, pressure switches or, considering the high flow rate, for use as additional filtered and regulated air take-off.

TECHNICAL DATA		FR SY1			FR SY2			
Threaded port		1/8″	1/4″	3/8″	3/8″	1/2″	3/4″	1″
Degree of filtration	µm	5 (yellow) - output air purity class ISO8573-1: 3.7.4						
		20 (white) - output air purity class ISO8573-1: 4.7.4						
		50 (blue) - output air purity class ISO8573-1: 5.7.4						
Max. inlet pressure	bar	15			13			
	MPa	1.5			1.3			
	psi	217			188			
Flow rate at 6.3 bar (0.63 MPa; 91 psi) ΔP 0.5 bar (0.05 MPa; 7 psi)	Nl/min	500	800	2200	3200	4300	5200	
(inlet pressure 10 bar)	scfm	18	28	78	113	152	184	
Flow rate at 6.3 bar (0.63 MPa; 91 psi) ΔP 1 bar (0.1 MPa; 14 psi)	Nl/min	1300	2000	3000	5800	7200	7400	
(inlet pressure 10 bar)	scfm	46	71	106	205	255	262	
Relief valve flow rate at 6.3 bar (0.63 MPa; 91 psi)	Nl/min	70			100			
	scfm	2.5			3.5			
Min/max temperature at 10 bar; 1 MPa; 145 psi	°C	From -10 to +50			From -10 to +50			
Full outflow with zero inlet pressure		Included						
Padlockable knob		Included						
Upstream pressure compensation		Included, via balanced valve						
Weight	g	244	239	230	623	596	592	580
Fluid		Compressed air or other inert gases						
Mounting position		Vertical						
Additional air take-off, for pressure gauges or fittings		1/8″, front and rear			1/4″, front and rear			
Additional air take-off flow rate at 6.3 bar	Nl/min	500			1400			
(0.63 MPa; 91 psi) ΔP 1 bar (0.1 MPa; 14 psi)	scfm	18			50			
Bowl capacity	cm^3	30			70			
Condensate drain		RMSA: drain with manual condensate discharge and automatic discharge at zero pressure						
		RA: automatic drain with condensate discharge, independent of pressure and flow rate.						
		Version conveys the draining by inserting the pipe having internal diameter 6 mm in the lower port.						
		SAC: automatic drain with condensate discharge. **Operates by pressure drop – requires variable air take-offs**.						
		Note: **the maximum input pressure for the RA version must not exceed 10 bar**						
Wall fixing screws		No. 2 M4 screws			No. 2 M5 screws			
Notes on use		The pressure must always be set upwards. For increased sensitivity, use a pressure regulator with a rated pressure as close as possible to the required value. On request version without overpressure exaust.						

METAL WORK PNEUMATIC

COMPONENTS

① Technopolymer adjusting knob
② Technopolymer bell
③ Steel adjusting spring (with Geomet® treatment for anti-corrosion version)
④ Technopolymer flange
⑤ Rolling diaphragm
⑥ IN/OUT bushing made of OT58 nickel-plated brass or passivated aluminium for 3/4″ - 1″
⑦ Technopolymer body
⑧ OT58 brass valve, with NBR vulcanized gasket
⑨ Clear technopolymer bowl
⑩ Zinc-plated steel plate for knob locking (stainless steel for anti-corrosion version)
⑪ OT58 brass adjusting screw
⑫ Technopolymer ring nut
⑬ Technopolymer plate
⑭ Technopolymer rod
⑮ Stainless steel valve spring
⑯ O-ring NBR gaskets
⑰ Drain (RMSA)
⑱ Sintered HDPE filter cartridge
⑲ Technopolymer screen

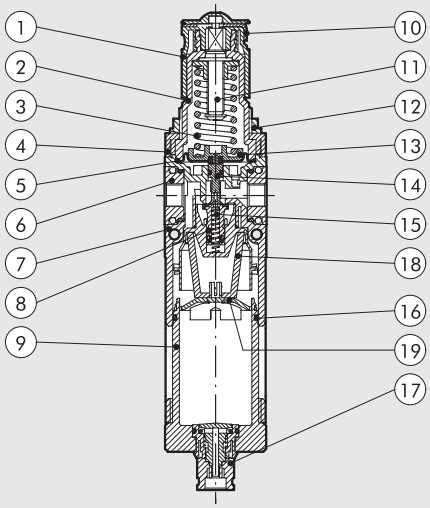

FLOW CHARTS

FR Syntesi® **SY1** 1/8″

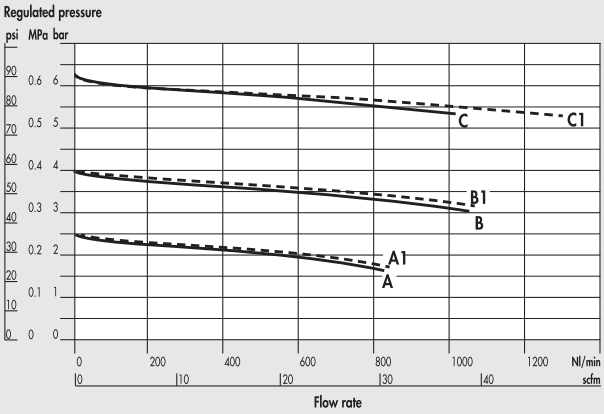

FR Syntesi® **SY1** 1/4″

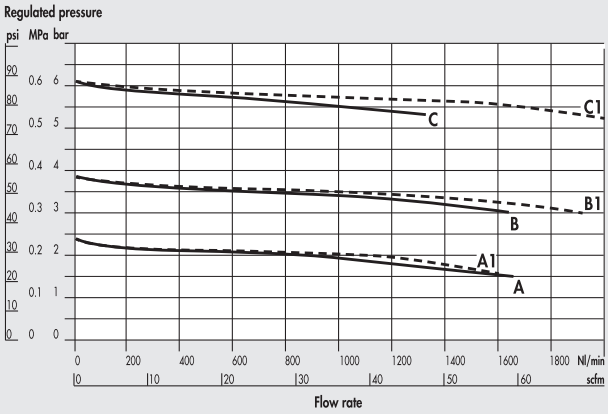

FR Syntesi® **SY1** 3/8″

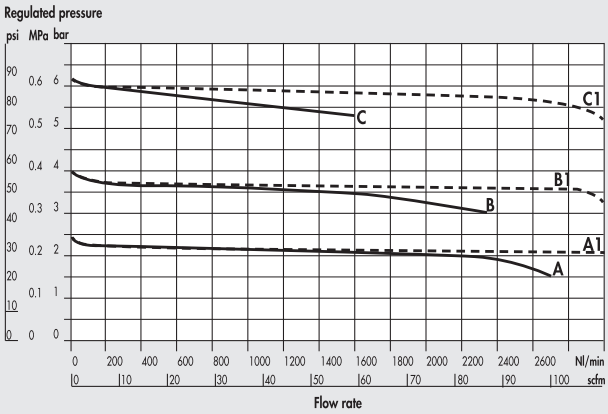

FR Syntesi® **SY2** 3/8″

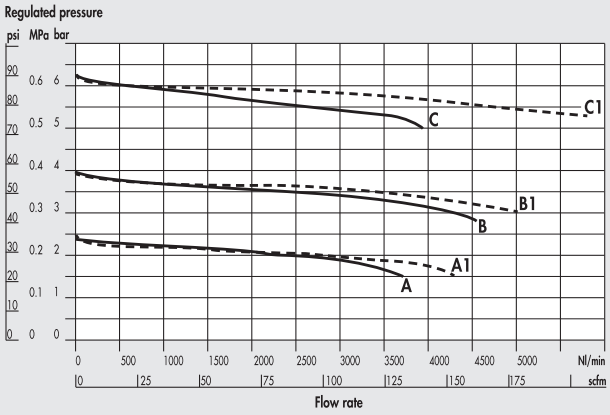

A = P In 7 bar - P Out 2.5 bar
B = P In 7 bar - P Out 4 bar
C = P In 7 bar - P Out 6.3 bar
A1 = P In 10 bar - P Out 2.5 bar
B1 = P In 10 bar - P Out 4 bar
C1 = P In 10 bar - P Out 6.3 bar

FR Syntesi® **SY2** 1/2"

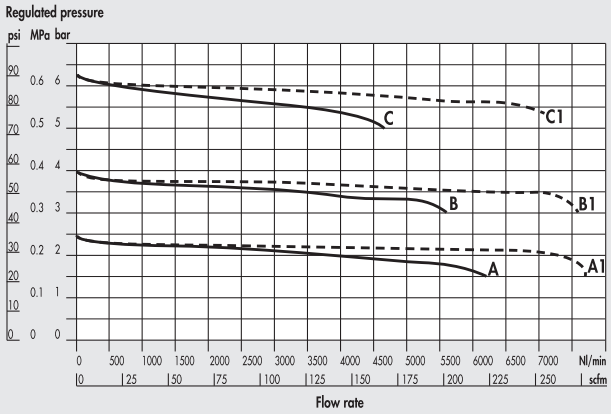

FR Syntesi® **SY2** 3/4" - 1"

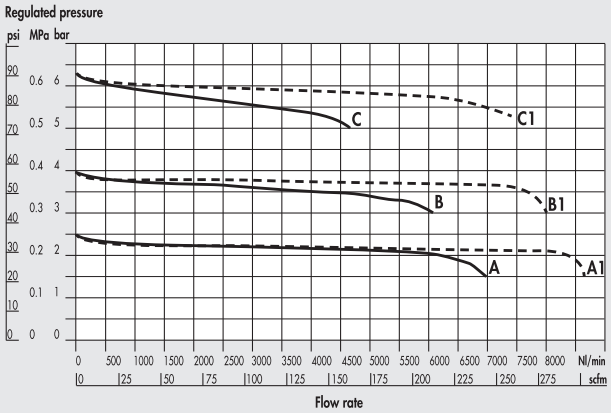

A = P In 7 bar - P Out 2.5 bar
B = P In 7 bar - P Out 4 bar
C = P In 7 bar - P Out 6.3 bar
A1 = P In 10 bar - P Out 2.5 bar
B1 = P In 10 bar - P Out 4 bar
C1 = P In 10 bar - P Out 6.3 bar

DIMENSIONS

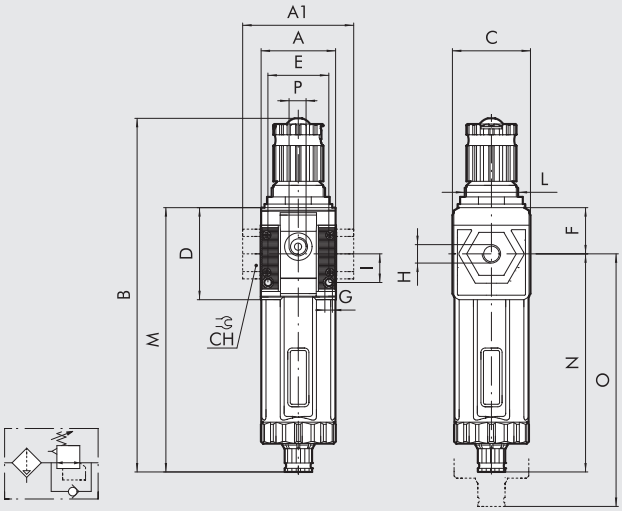

		SIZE 1			SIZE 2			
H (threaded port)		1/8"	1/4"	3/8"	3/8"	1/2"	3/4"	1"
A		42			60.5			
A1		-	-	44	-	-	95	95
B	RMSA	198			246			
	RA/SAC	202			250			
C		44			61			
CH		-			-	-	32	36
D		51.5			70.5			
E		33.5			47.5			
F		25.8			38.2			
G		Hole for M4 screws			Hole for M5 screws			
I		16			22.5			
L		M30x1.5			M38x2			
M	RMSA	148			178			
	RA/SAC	152			182			
N	RMSA	122.2			139.8			
	RA/SAC	126.2			143.8			
O	RMSA	202			245			
	RA/SAC	206			249			
P (pressure gauge port or additional air takes-off)		1/8"			1/4"			

NOTES

METAL WORK PNEUMATIC

KEY TO CODES

56	1	1	B	24	1
SYNTESI	**SIZE**	**THREADED INPUT CONNECTION**	**ELEMENT**	**DEGREE OF FILTRATION, TYPE OF CONDENSATE DRAIN AND SETTING RANGE**	**THREADED OUTPUT CONNECTION**
56 Syntesi **5X** Syntesi anti-corrosion	**1** Size 1	**0** Without bushing **1** 1/8″ port **2** 1/4″ port **3** 3/8″ port	**B** Filter-regulator	● **10** 5 µm, RMSA, 0 to 2 bar ● **20** 20 µm, RMSA, 0 to 2 bar ● **30** 50 µm, RMSA, 0 to 2 bar ● **40** 5 µm, RA, 0 to 2 bar ● **50** 20 µm, RA, 0 to 2 bar ● **60** 50 µm, RA, 0 to 2 bar ● **11** 5 µm, SAC, 0 to 2 bar ● **21** 20 µm, SAC, 0 to 2 bar ● **31** 50 µm, SAC, 0 to 2 bar	**0** Without bushing **1** 1/8″ port **2** 1/4″ port **3** 3/8″ port
	2 Size 2	**0** Without bushing **3** 3/8″ port **4** 1/2″ port **5** 3/4″ port **6** 1″ port		✚ **12** 5 µm, RMSA, 0 to 4 bar ✚ **22** 20 µm, RMSA, 0 to 4 bar ✚ **32** 50 µm, RMSA, 0 to 4 bar ✚ **42** 5 µm, RA, 0 to 4 bar ✚ **52** 20 µm, RA, 0 to 4 bar ✚ **62** 50 µm, RA, 0 to 4 bar ✚ **13** 5 µm, SAC, 0 to 4 bar ✚ **23** 20 µm, SAC, 0 to 4 bar ✚ **33** 50 µm, SAC, 0 to 4 bar **14** 5 µm, RMSA, 0 to 8 bar **24** 20 µm, RMSA, 0 to 8 bar **34** 50 µm, RMSA, 0 to 8 bar **44** 5 µm, RA, 0 to 8 bar **54** 20 µm, RA, 0 to 8 bar **64** 50 µm, RA, 0 to 8 bar **15** 5 µm, SAC, 0 to 8 bar **25** 20 µm, SAC, 0 to 8 bar **35** 50 µm, SAC, 0 to 8 bar **16** 5 µm, RMSA, 0 to 12 bar **26** 20 µm, RMSA, 0 to 12 bar **36** 50 µm, RMSA, 0 to 12 bar **46** 5 µm, RA, 0 to 12 bar **56** 20 µm, RA, 0 to 12 bar **66** 50 µm, RA, 0 to 12 bar **17** 5 µm, SAC, 0 to 12 bar **27** 20 µm, SAC, 0 to 12 bar **37** 50 µm, SAC, 0 to 12 bar	**0** Without bushing **3** 3/8″ port **4** 1/2″ port **5** 3/4″ port **6** 1″ port

● Not available in the anti-corrosion version.
✚ Anti-corrosion version available only in size 1.
RMSA: drain with manual condensate discharge and automatic discharge at zero pressure.
RA: automatic drain with condensate discharge, independent of pressure and flow rate. Version conveys the draining by inserting the pipe having internal diameter 6 mm in the lower port.
SAC: automatic drain with condensate discharge. **Operates by pressure drop – requires variable air take-offs**.

NOTES

PURCHASE ORDER CODES HAVING A MORE FREQUENT USE

N.B. Besides the below mentioned codes, you can order elements composed at your will according to the key to codes.

Code	Description	Code	Description
FILTER-REGULATOR Syntesi® SY1		**FILTER-REGULATOR Syntesi® SY2**	
5610B140	FR SY1 5 08 RMSA without bushings	**5620B140**	FR SY2 5 08 RMSA without bushings
5610B240	FR SY1 20 08 RMSA without bushings	**5620B240**	FR SY2 20 08 RMSA without bushings
5610B440	FR SY1 5 08 RA without bushings	**5620B440**	FR SY2 5 08 RA without bushings
5610B540	FR SY1 20 08 RA without bushings	**5620B540**	FR SY2 20 08 RA without bushings
5610B160	FR SY1 5 012 RMSA without bushings	**5620B160**	FR SY2 5 012 RMSA without bushings
5610B260	FR SY1 20 012 RMSA without bushings	**5620B260**	FR SY2 20 012 RMSA without bushings
5610B460	FR SY1 5 012 RA without bushings	**5620B460**	FR SY2 5 012 RA without bushings
5610B560	FR SY1 20 012 RA without bushings	**5620B560**	FR SY2 20 012 RA without bushings
5611B141	FR SY1 1/8 5 08 RMSA	**5623B143**	FR SY2 3/8 5 08 RMSA
5611B241	FR SY1 1/8 20 08 RMSA	**5623B243**	FR SY2 3/8 20 08 RMSA
5611B441	FR SY1 1/8 5 08 RA	**5623B443**	FR SY2 3/8 5 08 RA
5611B541	FR SY1 1/8 20 08 RA	**5623B543**	FR SY2 3/8 20 08 RA
5611B161	FR SY1 1/8 5 012 RMSA	**5623B163**	FR SY2 3/8 5 012 RMSA
5611B261	FR SY1 1/8 20 012 RMSA	**5623B263**	FR SY2 3/8 20 012 RMSA
5611B461	FR SY1 1/8 5 012 RA	**5623B463**	FR SY2 3/8 5 012 RA
5611B561	FR SY1 1/8 20 012 RA	**5623B563**	FR SY2 3/8 20 012 RA
5612B142	FR SY1 1/4 5 08 RMSA	**5624B144**	FR SY2 1/2 5 08 RMSA
5612B242	FR SY1 1/4 20 08 RMSA	**5624B244**	FR SY2 1/2 20 08 RMSA
5612B442	FR SY1 1/4 5 08 RA	**5624B444**	FR SY2 1/2 5 08 RA
5612B542	FR SY1 1/4 20 08 RA	**5624B544**	FR SY2 1/2 20 08 RA
5612B162	FR SY1 1/4 5 012 RMSA	**5624B164**	FR SY2 1/2 5 012 RMSA
5612B262	FR SY1 1/4 20 012 RMSA	**5624B264**	FR SY2 1/2 20 012 RMSA
5612B462	FR SY1 1/4 5 012 RA	**5624B464**	FR SY2 1/2 5 012 RA
5612B562	FR SY1 1/4 20 012 RA	**5624B564**	FR SY2 1/2 20 012 RA
5613B143	FR SY1 3/8 5 08 RMSA	**5625B145**	FR SY2 3/4 5 08 RMSA
5613B243	FR SY1 3/8 20 08 RMSA	**5625B245**	FR SY2 3/4 20 08 RMSA
5613B443	FR SY1 3/8 5 08 RA	**5625B445**	FR SY2 3/4 5 08 RA
5613B543	FR SY1 3/8 20 08 RA	**5625B545**	FR SY2 3/4 20 08 RA
5613B163	FR SY1 3/8 5 012 RMSA	**5625B165**	FR SY2 3/4 5 012 RMSA
5613B263	FR SY1 3/8 20 012 RMSA	**5625B265**	FR SY2 3/4 20 012 RMSA
5613B463	FR SY1 3/8 5 012 RA	**5625B465**	FR SY2 3/4 5 012 RA
5613B563	FR SY1 3/8 20 012 RA	**5625B565**	FR SY2 3/4 20 012 RA
		5626B146	FR SY2 1 5 08 RMSA
		5626B246	FR SY2 1 20 08 RMSA
		5626B446	FR SY2 1 5 08 RA
		5626B546	FR SY2 1 20 08 RA
		5626B166	FR SY2 1 5 012 RMSA
		5626B266	FR SY2 1 20 012 RMSA
		5626B466	FR SY2 1 5 012 RA
		5626B566	FR SY2 1 20 012 RA

NOTE

Anti-corrosion version

5X_ _ _ _ _ _

Example

5X11B141 FR SY1 1/8 5 08 RMSA anti-corrosion

NOTES

SYNTESi® LUBRICATOR

METAL WORK® PNEUMATIC

The pneumatic lubricator is the simplest way of efficiently lubricating the actuators linked to a circuit. As compressed air flows towards the lubricator, it encounters a flexible diaphragm which partially blocks the way, creating a small pressure difference between the inlet and outlet air. Being at the higher pressure, the oil in the bowl is pumped through a tube with a filter towards the regulation pin.
The quantity of oil can be metered accurately since the drops can be viewed through the transparent dome.
Filling with oil must take place in the absence of pressure, unscrewing the plug next to the dome. On the front and back there is a port (1/8" for size 1 and 1/4" for size 2) that can be used with pressure gauges, pressure switches or as an additional air intake.

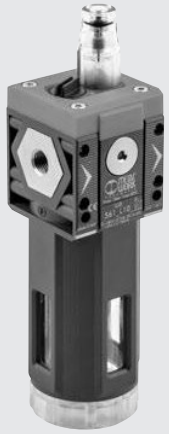

TECHNICAL DATA		LUB SY1			LUB SY2			
Threaded port		1/8"	1/4"	3/8"	3/8"	1/2"	3/4"	1"
Type of lubrication		Oil mist						
Version		Manual filling from the top						
Max. input pressure	bar	15			13			
	MPa	1.5			1.3			
	psi	217			188			
Flow rate at 6.3 bar (0.63 MPa; 91 psi) ΔP 0.5 bar (0.05 MPa; 7 psi)	Nl/min	1300	1700	2200	2300	3900	3900	
	scfm	46	60	78	81	138	138	
Flow rate at 6.3 bar (0.63 MPa; 91 psi) ΔP 1 bar (0.1 MPa; 14 psi)	Nl/min	1600	3000	3650	3650	6100	6100	
	scfm	57	106	129	129	216	216	
Min/max temperature at 10 bar; 1 MPa; 145 psi	°C	From -10 to +50			From -10 to +50			
Weight	g	185	180	171	480	453	449	437
Fluid		Compressed air or other inert gases						
Quantity of filled oil	cm^3	60			130			
Mounting position		Vertical			Vertical			
Port for additional air take-off		1/8", front and rear, lubricated air			1/4", front and rear, lubricated air			
Additional air take-off flow rate at 6.3 bar	Nl/min	450			800			
(0.63 MPa; 91 psi) ΔP 1 bar (0.1 MPa; 14 psi)	scfm	16			53			
Wall fixing screws		No. 2 M4 screws			No. 2 M5 screws			
Recommended oils		ISO and UNI FD22 (Energol HPL; Spinesso; Mobil DTE; Tellus oil)						
Notes on use		Install the lubricator as close as possible to the point of use. Fill the lubricator bowl with oil before pressurizing the system. Do not use cleaning oils, brake fluid oils or solvents in general. For the best lubrication results, set the drip rate to one drop for 300-600 Nl.						

COMPONENTS

① Technopolymer oil filling plug
② Technopolymer flange
③ IN/OUT bushing made of OT58 nickel-plated brass or passivated aluminium for 3/4" - 1"
④ Venturi NBR diaphragm
⑤ Technopolymer body
⑥ Clear technopolymer bowl
⑦ OT 58 brass oil flow regulation needle
⑧ Clear technopolymer cover
⑨ NBR o-ring gasket
⑩ Rilsan® oil suction pipe
⑪ Oil filter

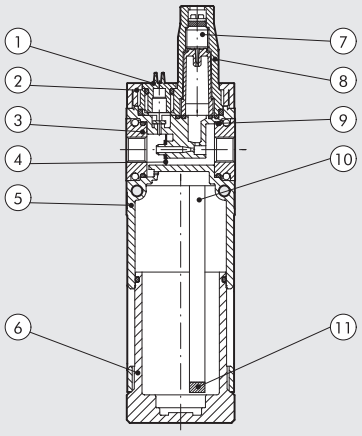

FLOW CHARTS

LUB Syntesi® **SY1** 1/8″

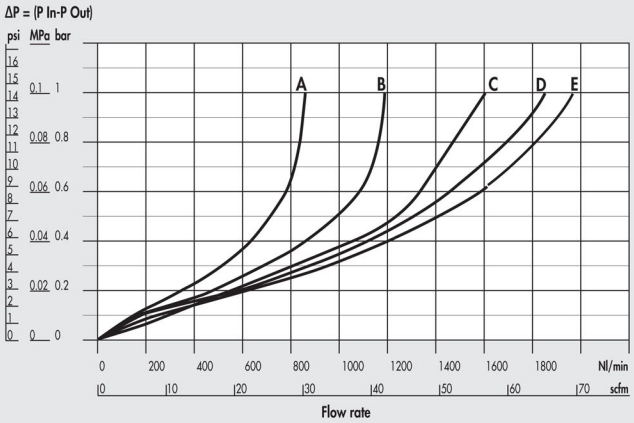

LUB Syntesi® **SY1** 1/4″

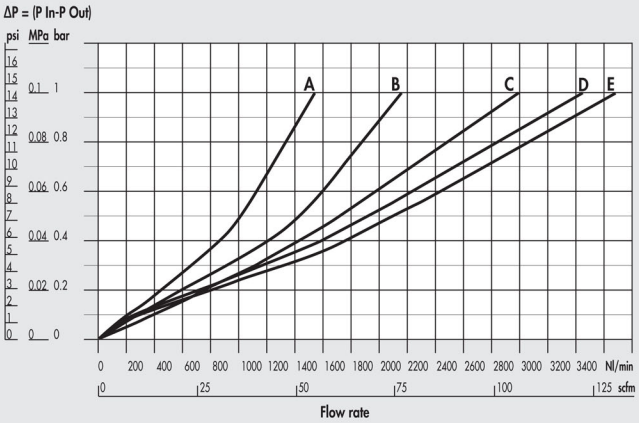

LUB Syntesi® **SY1** 3/8″

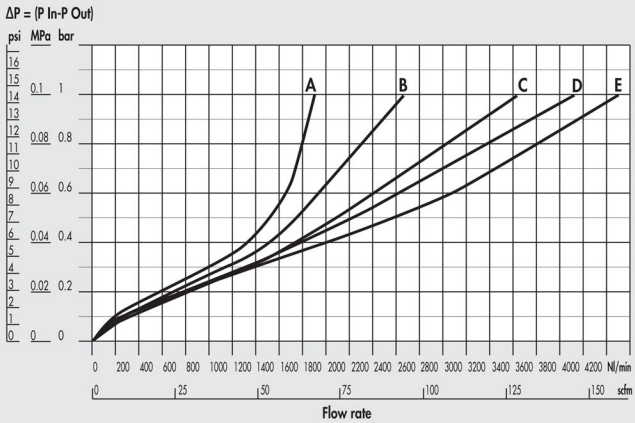

Minimum operating flow chart **SY1**

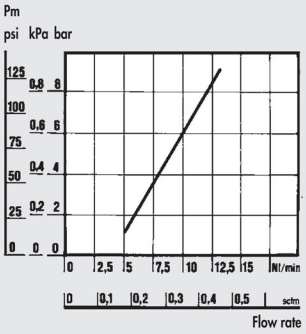

LUB Syntesi® **SY2** 3/8″

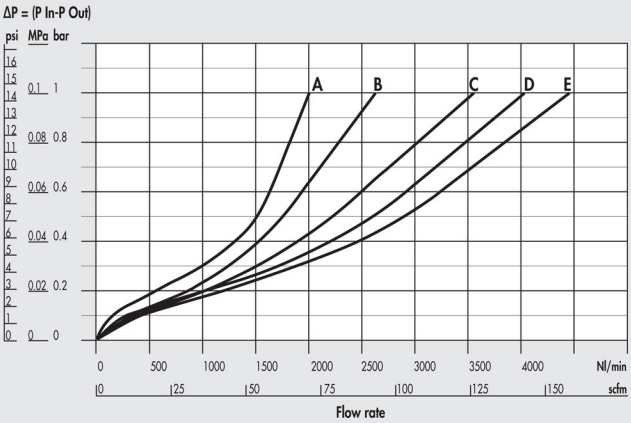

LUB Syntesi® **SY2** 1/2″

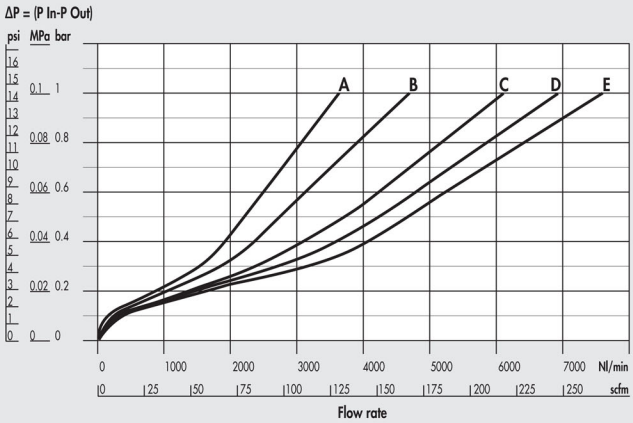

A = 2.5 bar - 0.25 MPa - 36 psi
B = 4 bar - 0.4 MPa - 58 psi
C = 6.3 bar - 0.63 MPa - 91 psi
D = 8 bar - 0.8 MPa - 116 psi
E = 10 bar - 1 MPa - 145 psi

METAL WORK PNEUMATIC

LUB Syntesi® **SY2** 3/4″ - 1″

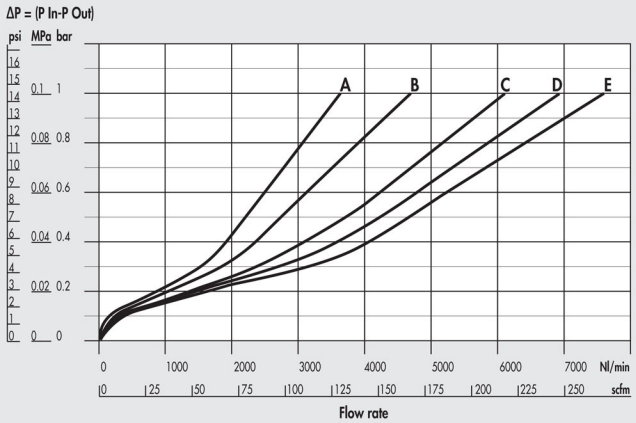

Minimum operating flow chart **SY2**

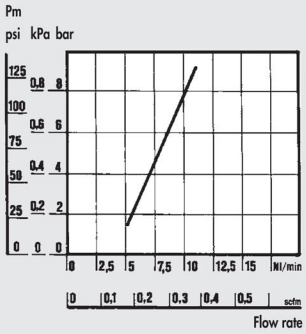

A = 2.5 bar - 0.25 MPa - 36 psi
B = 4 bar - 0.4 MPa - 58 psi
C = 6.3 bar - 0.63 MPa - 91 psi
D = 8 bar - 0.8 MPa - 116 psi
E = 10 bar - 1 MPa - 145 psi

DIMENSIONS

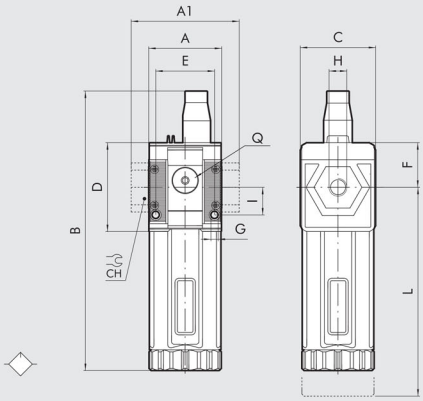

	SIZE 1			SIZE 2			
H (threaded port)	1/8″	1/4″	3/8″	3/8″	1/2″	3/4″	1″
A	42			60.5			
A1	-	-	44	-	-	95	95
B	162			200.5			
C	44			61			
CH	-			-	-	32	36
D	51.5			70.5			
E	33.5			47.5			
F	25.8			38.2			
G	Hole for M4 screws			Hole for M5 screws			
I	16			22.5			
L	158			193			
Q (no. 2 additional air takes-off)	1/8″			1/4″			

KEY TO CODES

56	1	1	L	10	1
SYNTESI	**SIZE**	**THREADED INPUT CONNECTION**	**ELEMENT**	**OIL FILLING**	**THREADED OUTPUT CONNECTION**
56 Syntesi	**1** Size 1	**0** Without bushing	**L** Lubricator	**10** Manual filling from the top	**0** Without bushing
5X Syntesi anti-corrosion		**1** 1/8″ port			**1** 1/8″ port
		2 1/4″ port			**2** 1/4″ port
		3 3/8″ port			**3** 3/8″ port
	2 Size 2	**0** Without bushing			**0** Without bushing
		3 3/8″ port			**3** 3/8″ port
		4 1/2″ port			**4** 1/2″ port
		5 3/4″ port			**5** 3/4″ port
		6 1″ port			**6** 1″ port

PURCHASE ORDER CODES HAVING A MORE FREQUENT USE

N.B. Besides the below mentioned codes, you can order elements composed at your will according to the key to codes.

Code	Description	Code	Description	NOTE	
LUBRIFICATORE Syntesi® SY1		**LUBRIFICATORE Syntesi® SY2**		**Anti-corrosion version**	
5610L100	LUB SY1 without bushings	**5620L100**	LUB SY2 without bushings	**5X**_ _ _ _ _ _	
5611L101	LUB SY1 1/8	**5623L103**	LUB SY2 3/8	**Example**	
5612L102	LUB SY1 1/4	**5624L104**	LUB SY2 1/2	**5X11L101**	LUB SY1 1/8 anti-corrosion
5613L103	LUB SY1 3/8	**5625L105**	LUB SY2 3/4		
		5626L106	LUB SY2 1		

SYNTESI® SHUT-OFF VALVE

This device separates the compressed air circuit from the main air supply. It is a three-way valve that relieves the downstream system in the closed position. This makes it useful for maintenance operations or when the air supply to a machine or piece of equipment needs to be shut off.
Manual, pneumatic, electro-pneumatic and assisted electro-pneumatic control versions are available. The last version must be used if the inlet pressure is outside the electro-pneumatic valve operating range, so for particularly low or high pressures.
The version with manual control can be locked and you can enter up to two padlocks on size 1 and up to three on size 2 when the valve is in the closed position. As an alternative, a version with a single Ø7 hole is available for a single padlock. On the front and back there is a port (1/8″ for size 1 and 1/4″ size 2) that can be used with pressure gauges, pressure switches or as an additional air intake.

TECHNICAL DATA		V3V SY1			V3V SY2			
Threaded port		1/8″	1/4″	3/8″	3/8″	1/2″	3/4″	1″
Threaded discharge port		1/8″			1/4″			
Type of control		Manual - pneumatic - Elpn - Elpn pilot-assisted			Manual - Pneumatic - Cnomo elpn - Cnomo elpn pilot-assisted			
Max inlet pressure for pneumatic and solenoid pilot-assisted versions	bar	15			13			
	MPa	1.5			1.3			
	psi	217			188			
Inlet pressure for solenoid version	bar	3 - 10			3 - 10			
	MPa	0.3 - 1			0.3 - 1			
	psi	43 - 145			43 - 145			
Pilot pressure for pneumatic and solenoid pilot-assisted versions	bar	3 - 10			3 - 10			
	MPa	0.3 - 1			0.3 - 1			
	psi	43 - 145			43 - 145			
Flow rate at 6.3 bar (0.63 MPa; 91 psi) ΔP 0.5 bar (0.05 MPa; 7 psi)	Nl/min	800	1000	1100	2800	3000	3000	
	scfm	28	35	39	99	106	106	
Flow rate at 6.3 bar (0.63 MPa; 91 psi) ΔP 1 bar (0.1 MPa; 14 psi)	Nl/min	1100	1500	1600	3600	4000	4000	
	scfm	39	53	57	127	141.5	141.5	
Exhaust flow rate at 6.3 bar (0.63 MPa; 91 psi)	Nl/min	500			2000			
	scfm	18			71			
Min/max temperature at 10 bar; 1 MPa; 145 psi	°C	From -10 to +50			From -10 to +50			
Padlockable knob					Included			
Weight	g	197	192	183	476	449	445	433
Fluid		Compressed air or other inert gases						
Mounting position		In any position						
Additional air take-off, for pressure gauges or fittings		1/8″, front and rear			1/4″, front and rear			
Additional air take-off flow rate at 6.3 bar	Nl/min	500			1500			
(0.63 MPa; 91 psi) ΔP 1 bar (0.1 MPa; 14 psi)	scfm	18			53			
Wall fixing screws		No. 2 M4 screws			No. 2 M5 screws			
Coil capacity for electro-pneumatic version		12 VDC and 24 VDC = 2W; 24 VAC, 110 VAC and 220 VAC = 3.5 VA						
Hand operator of electro-pneumatic versions		Bistable: horizontal = OFF, vertical = ON (see drawing page **C1**.40)						

COMPONENTS

① Technopolymer knob
② Technopolymer hinge
③ Technopolymer body
④ NBR o-ring gasket
⑤ IN/OUT bushing made of OT58 nickel-plated brass or passivated aluminium for 3/4″ - 1″
⑥ OT58 brass valve with NBR vulcanized gasket
⑦ Stainless steel valve spring
⑧ Technopolymer plug
⑨ OT58 brass threaded insert
⑩ Zinc-plated steel plate for knob locking (stainless steel for anti-corrosion version)
⑪ Stainless steel spring stem recovery
⑫ OT58 brass stem

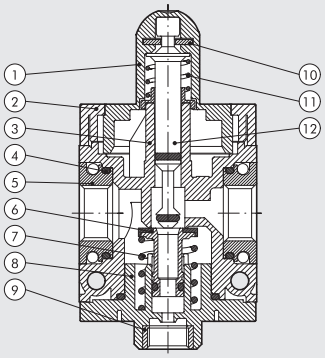

V10 - Steel plate with Ø3.5 holes for locking with 2 padlocks (SY1) or 3 padlocks (SY2).

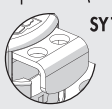

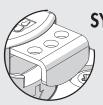

V11 - Steel plate with a single Ø7 hole for docking with a single padlock (compatible with most of the padlocks available from the trade with a Ø5mm arch).

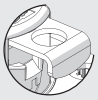

METAL WORK PNEUMATIC

DIMENSIONS

MANUAL — SY1-SY2

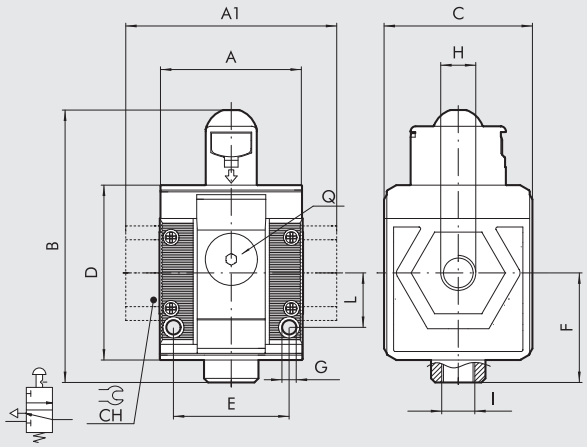

PNEUMATIC — SY1-SY2

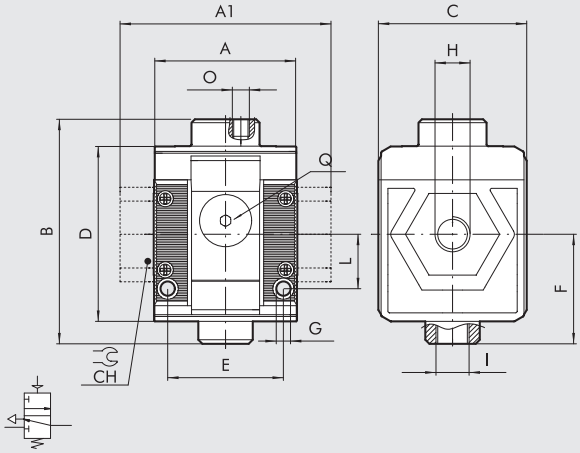

SOLENOID/SOLENOID PILOT-ASSISTED* — SY1

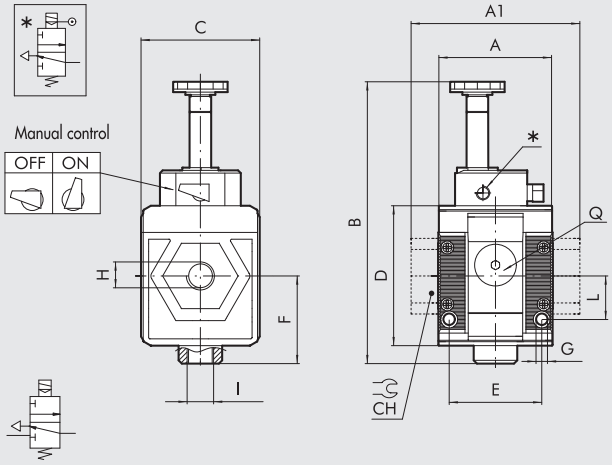

CNOMO SOLENOID / CNOMO SOLENOID PILOT-ASSISTED* — SY2

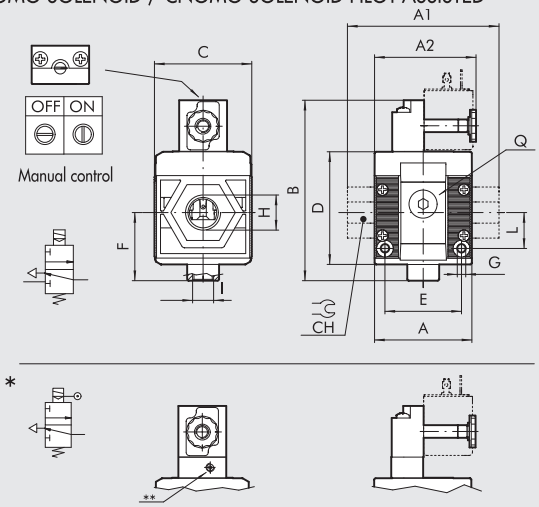

N.B.: Before assembling other Syntesi elements after the V3V, remember to mount the coil on the V3V itself.

	MANUAL							PNEUMATIC							SOLENOID/SOLENOID PILOT-ASSISTED			CNOMO SOLENOID/CNOMO SOLENOID PILOT-ASSISTED			
	SIZE 1			SIZE 2				SIZE 1			SIZE 2				SIZE 1			SIZE 2			
H (threaded port)	1/8″	1/4″	3/8″	3/8″	1/2″	3/4″	1″	1/8″	1/4″	3/8″	3/8″	1/2″	3/4″	1″	1/8″	1/4″	3/8″	3/8″	1/2″	3/4″	1″
A	42			60.5				42			60.5				42			60.5			
A1	-	-	44	-	-	95	95	-	-	44	-	-	95	95	-	-	44	-	-	95	95
A2	-			-				-			-				-			65			
B	80			109				66			94				104			-			
Cnomo	-			-				-			-				-			113			
Cnomo pilot ass.	-			-				-			-				-			126			
C	44			61				44			61				44			61			
CH	-			-	-	32	36	-			-	-	32	36	-			-	-	32	36
D	51.5			70.5				51.5			70.5				51.5			70.5			
E	33.5			47.5				33.5			47.5				33.5			47.5			
F	32.2			42.7				32.2			42.7				32.2			42.7			
G	Hole for M4 screws			Hole for M5 screws				Hole for M4 screws			Hole for M5 screws				Hole for M4 screws			Hole for M5 screws			
I (exhaust)	1/8″			1/4″				1/8″			1/4″				1/8″			1/4″			
L	16			22.5				16			22.5				16			22.5			
O (pilot)	-			-				M5			1/8″				-			-			
Q (no. 2 additional air takes-off)	1/8″			1/4″				1/8″			1/4″				1/8″			1/4″			
** Pilot	-							-			-				M5			M5			

KEY TO CODES

56	1	1	V	10	1
SYNTESI	**SIZE**	**THREADED INPUT CONNECTION**	**ELEMENT**	**TYPE**	**THREADED OUTPUT CONNECTION**
56 Syntesi **5X** Syntesi anti-corrosion	**1** Size 1	**0** Without bushing **1** 1/8″ port **2** 1/4″ port **3** 3/8″ port	**V** Shut-off valve	**10** Manual with Ø3.5 hole for padlocks **✱ 11** Manual with Ø7 hole for padlock **20** Pneumatic **● 30** Solenoid pilot-assisted **● 70** Solenoid	**0** Without bushing **1** 1/8″ port **2** 1/4″ port **3** 3/8″ port
	2 Size 2	**0** Without bushing **3** 3/8″ port **4** 1/2″ port **5** 3/4″ port **6** 1″port			**0** Without bushing **3** 3/8″ port **4** 1/2″ port **5** 3/4″ port **6** 1″ port

✱ Compatible with most of the padlocks available from the trade with a Ø5mm arch.
● Not available in the anti-corrosion version.

PURCHASE ORDER CODES HAVING A MORE FREQUENT USE

N.B. Besides the below mentioned codes, you can order elements composed at your will according to the key to codes.

Code	Description
Syntesi® SY1 SHUT-OFF VALVE	
5610V100	V3V SY1 manual without bushings
5611V101	V3V SY1 1/8 manual
5612V102	V3V SY1 1/4 manual
5613V103	V3V SY1 3/8 manual
5610V200	V3V SY1 pneumatic without bushings
5611V201	V3V SY1 1/8 pneumatic
5612V202	V3V SY1 1/4 pneumatic
5613V203	V3V SY1 3/8 pneumatic
5610V300	V3V SY1 elpn pilot-assisted without bushings
5611V301	V3V SY1 1/8 elpn pilot-assisted
5612V302	V3V SY1 1/4 elpn pilot-assisted
5613V303	V3V SY1 3/8 elpn pilot-assisted
5610V700	V3V SY1 elpn without bushings
5611V701	V3V SY1 1/8 elpn
5612V702	V3V SY1 1/4 elpn
5613V703	V3V SY1 3/8 elpn

Code	Description
Syntesi® SY2 SHUT-OFF VALVE	
5620V100	V3V SY2 manual without bushings
5623V103	V3V SY2 3/8 manual
5624V104	V3V SY2 1/2 manual
5625V105	V3V SY2 3/4 manual
5626V106	V3V SY2 1 manual
5620V200	V3V SY2 pneumatic without bushings
5623V203	V3V SY2 3/8 pneumatic
5624V204	V3V SY2 1/2 pneumatic
5625V205	V3V SY2 3/4 pneumatic
5626V206	V3V SY2 1 pneumatic
5620V300	V3V SY2 elpn pilot-assisted Cnomo without bushings
5623V303	V3V SY2 3/8 elpn pilot-assisted Cnomo
5624V304	V3V SY2 1/2 elpn pilot-assisted Cnomo
5625V305	V3V SY2 3/4 elpn pilot-assisted Cnomo
5626V306	V3V SY2 1 elpn pilot-assisted Cnomo
5620V700	V3V SY2 elpn Cnomo without bushings
5623V703	V3V SY2 3/8 elpn Cnomo
5624V704	V3V SY2 1/2 elpn Cnomo
5625V705	V3V SY2 3/4 elpn Cnomo
5626V706	V3V SY2 1 elpn Cnomo

NOTE

Anti-corrosion version

5X_ _ _ _ _ _

Example

5X11V101 V3V SY1 1/8 anti-corrosion

NOTES

SYNTESI® SHUT-OFF-VALVE SAFE AIR® SERIES

The V3V Syntesi® SAFE AIR® is a three-way valve that, when closed, vents the downstream system. It is used during maintenance operations or when it is necessary to remove air from machinery or equipment.
It is equipped with a diagnostic system, that uses an inductive sensor, to monitor the position of the spool.
This means that when the valve is deactivated, the sensor is in the ON state, when the valve is activated, the sensor is in the OFF state.
A status in which the sensor is OFF state and the coil de-energized indicates that there is a problem.
To reduce the probability of risk during plant maintenance, the manual actuator mounted on the electric control is the monostable type.
This valve is a category 2 component, according to EN ISO 13849, and is suitable for use in safety circuits up to PL = d.
For applications requiring higher performance levels, we have also develop a double-channel version (redundant) that requires the use of two valves with a monitored spool arranged so that port 2 of the first valve is connected to port 1 of the second valve. It is sufficient for just one of the two valves to be de-energized to discharge the downstream system; so, even if one of the two spools remains blocked, the other guarantees relief of the compressed-air circuit. In this case, too, the presence of spool position sensors can be used to monitor the status. The double valve is a category 4 component according to EN ISO 13849 and is suitable for use in safety circuits up to PL = e.
Both the single and double channel valves come with: a voluntary examination certificate No. BVI-25-MAC-CV-0004 issued by Bureau Veritas in accordance with EN ISO 13849.

SINGLE V3V Syntesi® SERIES SAFE AIR®

TECHNICAL DATA		SINGLE V3V SY2 SAFE AIR®			
Threaded port		3/8"	1/2"	3/4"	1"
Threaded discharge port		No. 2 from 1/2"			
Fluid		Filtered unlubricated air (50µm)			
Operation		3/2 monostable			
Operating pressure:					
non-assisted		from 3 to 10 bar - from 0.3 to 1 MPa - from 43 to 145 psi			
pilot-assisted		from 0 to 10 bar - from 0 to 1 MPa - from 0 to 145 psi			
Minimum pilot pressure		from 3 to 10 bar - from 0.3 to 1 MPa - from 43 to 145 psi			
Min/max temperature at 10 bar; 1 MPa; 145 psi	°C	from -10 to +50 ✱			
Weight	g	920	890	890	875
Conductance C	Nl/min · bar	764	821	828	
Critical ratio b	bar/bar	0.25	0.27	0.36	
Flow rate at 6.3 bar Δp 0.5 bar	Nl/min	2300	2550	2700	
Flow rate at 6.3 bar Δp 1 bar	Nl/min	3200	3500	3700	
Conductance C on relief	Nl/min · bar	742			
Critical ratio b on relief	bar/bar	0.09			
Flow rate on free exhaust at 6.3 bar	Nl/min	5400			
TRA/TRR at 6.3 bar	ms/ms	33/100			
Mounting position		In any position			
Wall fixing screws		No. 2 M5 screws			
Hand operator		Monostable			
Coils		22 and 30 mm side, Ø 8 hole – EN175301-803 connection, type B			
		Certified EN 60204.1 and VDE 0580 ■			
Class of protection		IP65 with coil and connector mounted			
Noise level		Max 95 dBA with silenced relief			
Max coil ring nut torque	Nm	1			
CE marking		In accordance with Machinery Directive, Annexe V ●			
Safety function		Cuts off the power supply and relieves the air circuit connected to port 2			
Type of sensor used		Inductive proximity sensors (refer to page **C1**.47 for sensor details)			
B10d		10 x 10^6 cycles			
Category - EN ISO 13849		2			
PL - EN ISO 13849		Suitable for use in safety circuits up to PL = d			

✱ The dew point must be at least 10°C lower than the fluid temperature, to avoid ice formation
■ To avoid malfunctions, we recommend using Metal Work accessories
● The declaration can be downloaded from www.metalwork.it

COMPONENTS - SINGLE VALVE

① Technopolymer flange
② Technopolymer body
③ IN/OUT bushing made of OT58 nickel-plated brass or passivated aluminium for 3/4″ - 1″
④ Chemically nickel-plated aluminum spool
⑤ Technopolymer distance
⑥ NBR gaskets
⑦ Anodized aluminium end cap
⑧ Aluminum spring guide
⑨ Special steel spring
⑩ Silencers
⑪ Inductive sensor
⑫ Operator: Brass pipe - Stainless steel core
⑬ Technopolymer piston
⑭ NBR piston gasket

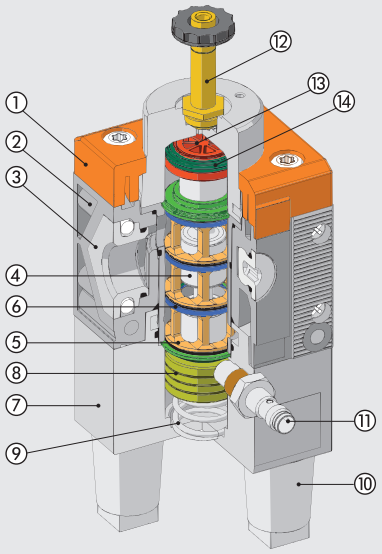

FLOW CHARTS ON DELIVERY - SINGLE VALVE

V3V Syntesi® **SY2** 3/8″

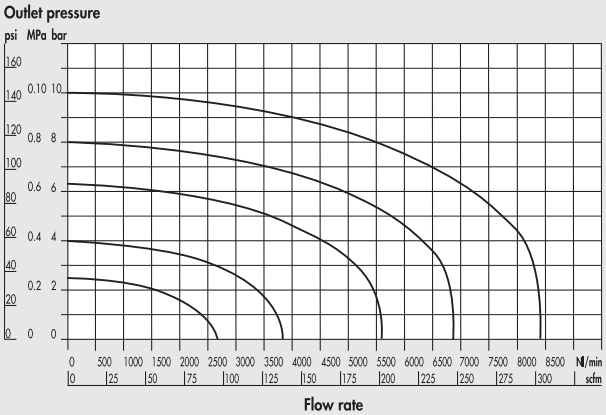

V3V Syntesi® **SY2** 1/2″

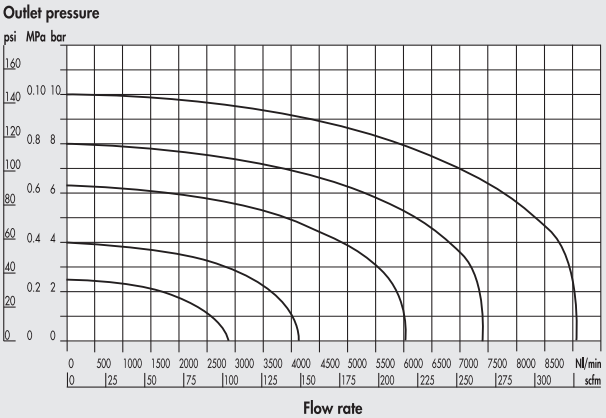

V3V Syntesi® **SY2** 3/4″ - 1″

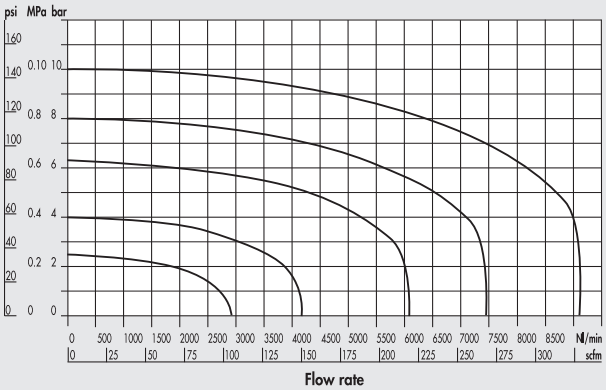

FLOW CHARTS ON RELIEF - SINGLE VALVE

V3V Syntesi® **SY2** 3/8" - 1/2" - 3/4" - 1"

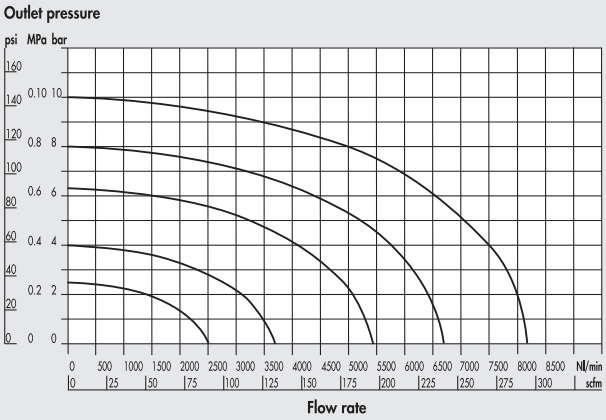

DIMENSIONS - SINGLE VALVE

PILOT-ASSISTED VERSION

NOT PILOT-ASSISTED VERSION

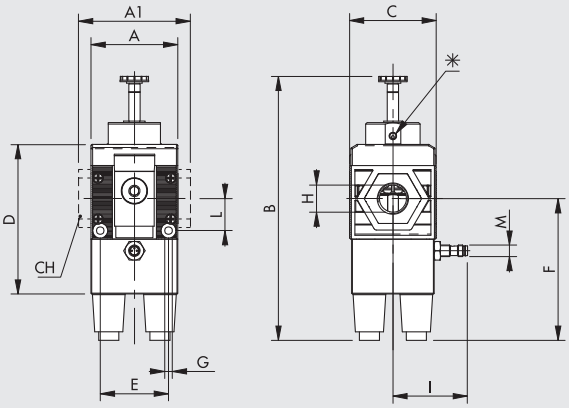

	SIZE 2			
H (threaded port)	3/8"	1/2"	3/4"	1"
A	60.5			
A1	-	-	95	95
B	186			
C	61			
CH	-	-	32	36
D	105			
E	47.5			
F	97			
G	Hole for M5 screws			
I	53			
L	22.5			
M	M8x1			
* Pilot	M5			

KEY TO CODES - SINGLE VALVE

56	2	3	W	70	3
SYNTESI	**SIZE**	**THREADED INPUT CONNECTION**	**ELEMENT**	**TYPE**	**THREADED OUTPUT CONNECTION**
56 Syntesi	**2** Size 2	**0** Without bushing **3** 3/8" port **4** 1/2" port **5** 3/4" port **6** 1" port	**W** Shut-off-valve Safe Air®	**30** Solenoid pilot-assisted **70** Solenoid	**0** Without bushing **3** 3/8" port **4** 1/2" port **5** 3/4" port **6** 1" port

PURCHASE ORDER CODES HAVING A MORE FREQUENT USE - SINGLE VALVE

N.B. Besides the below mentioned codes, you can order elements composed at your will according to the key to codes.

Code	Description
Syntesi® SY2 SHUT-OFF-VALVES SAFE AIR®	
5620W300	V3V SY2 elpn Safe Air® pilot-assisted without bushings
5623W303	V3V SY2 3/8 elpn pilot-assisted Safe Air®
5624W304	V3V SY2 1/2 elpn pilot-assisted Safe Air®
5625W305	V3V SY2 3/4 elpn pilot-assisted Safe Air®
5626W306	V3V SY2 1 elpn pilot-assisted Safe Air®
5620W700	V3V SY2 elpn Safe Air® without bushings
5623W703	V3V SY2 3/8 elpn Safe Air®
5624W704	V3V SY2 1/2 elpn Safe Air®
5625W705	V3V SY2 3/4 elpn Safe Air®
5626W706	V3V SY2 1 elpn Safe Air®

EXAMPLE OF A SAFETY CIRCUIT WITH A SINGLE VALVE

Below is an example of a wiring diagram for controlling Metal Work SAFE AIR® single valves using Pilz® components.
Circuit components:
- a Pilz® safety module PNOZ® s3 for controlling the emergency stop button; terminal Y32 indicates the status of the module, which can be relayed to the machine control logic
- an emergency stop button S1 (Pilz® - PIT® es Set) linked to terminals S11-S12-S22-S23 of the PNOZ® s3
- a Metal Work SAFE AIR® solenoid valve, the 24 VDC coil of which is fed by terminal 14 of the PNOZ® s3 (the other terminal of the coil is 0 V); the valve's Hall-effect sensor is 24 VDC
- a start/reset button S2
- a relay K1, controlled by the valve sensor; an NO contact of the relay is in series with button S2 of the PNOZ® s3.

Expected behaviour with the system operating correctly:
- system deactivated:
  - contact 14 is OFF
  - the coil is de-energized
  - the sensor is ON
  - relay K1 is energized
  - contact K1 is closed
  - contact Y32 is OFF
- with the system activated via the start/reset button S2:
  - contact 14 is ON
  - the coil is energized
  - the sensor is OFF
  - relay K1 is de-energized
  - contact K1 is open
  - contact Y32 is ON

In the event of a malfunction (e.g. spool jam), the coil is de-energized but the sensor remains OFF, relay K1 remains de-energized, contact K1 remains open (preventing subsequent restarts) and contact Y32 is OFF.
In the event of a valve fault, the circuit in the diagram below does not allow relief of the compressed air system. Sensor status must be monitored to assess valve operation. Contact Y32 indicates the status of the PNOZ® s3, not the status of the sensor.
All the electrical connections between the various components must comply with the applicable safety regulations.
If the emergency button is operated at a frequency of 1 actuation per hour, the circuit activates a safety function with PL = c (calculations made with the PAScal programme by Pilz®). Responsibility for final checking that PL lies with the person assembling the circuit.

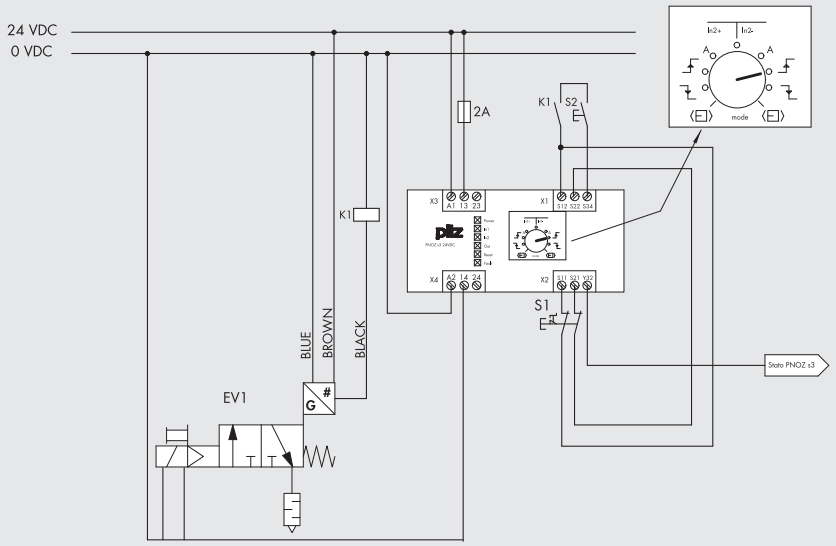

METAL WORK PNEUMATIC

DOUBLE V3V Syntesi® SERIE SAFE AIR®

TECHNICAL DATA		DOUBLE V3V SY2 SAFE AIR®			
Threaded port		3/8"	1/2"	3/4"	1"
Threaded discharge port		No. 4 from 1/2"			
Fluid		Filtered unlubricated air (50µm)			
Operation		3/2 monostable			
Operating pressure:					
non-assisted		from 3 to 10 bar - from 0.3 to 1 MPa - from 43 to 145 psi			
pilot-assisted		from 0 to 10 bar - from 0 to 1 MPa - from 0 to 145 psi			
Minimum pilot pressure		from 3 to 10 bar - from 0.3 to 1 MPa - from 43 to 145 psi			
Min/max temperature at 10 bar; 1 MPa; 145 psi	°C	from -10 to +50 ✱			
Weight	g	1840	1780	1780	1750
Conductance C	Nl/min · bar	557	600		
Critical ratio b	bar/bar	0.23	0.24		
Flow rate at 6.3 bar Δp 0.5 bar	Nl/min	1700	1800		
Flow rate at 6.3 bar Δp 1 bar	Nl/min	2300	2500		
Conductance C on relief	Nl/min · bar	742			
Critical ratio b on relief	bar/bar	0.09			
Flow rate on free exhaust at 6.3 bar	Nl/min	5400			
TRA/TRR at 6.3 bar	ms/ms	70/100			
Mounting position		In any position			
Wall fixing screws		No. 2 M5 screws			
Hand operator		Monostable			
Coils		22 and 30 mm side, Ø 8 hole – EN175301-803 connection, type B			
		Certified EN 60204.1 and VDE 0580 ■			
Class of protection		IP65 with coil and connector mounted			
Noise level		Max 95 dBA with silenced relief			
Max coil ring nut torque	Nm	1			
CE marking		In accordance with Machinery Directive, Annexeo V ●			
Safety function		Cuts off the power supply and relieves the air circuit connected to port 2			
Type of sensor used		Inductive proximity sensors (refer to page **C1**.47 for sensor details)			
B10d		10 x 10^6 cycles			
Category - EN ISO 13849		4			
PL - EN ISO 13849		Suitable for use in safety circuits up to PL = e			

✱ The dew point must be at least 10°C lower than the fluid temperature, to avoid ice formation
■ To avoid malfunctions, we recommend using Metal Work accessories
● The declaration can be downloaded from www.metalwork.it

COMPONENTS - DOUBLE VALVE

① Technopolymer flange
② Technopolymer body
③ IN/OUT bushing made of OT58 nickel-plated brass or passivated aluminium for 3/4" - 1"
④ Chemically nickel-plated aluminum spool
⑤ Technopolymer distance
⑥ NBR gaskets
⑦ Anodized aluminium end cap
⑧ Aluminum spring guide
⑨ Special steel spring
⑩ Silencers
⑪ Inductive sensor
⑫ Operator: Brass pipe - Stainless steel core
⑬ Technopolymer piston
⑭ NBR piston gasket

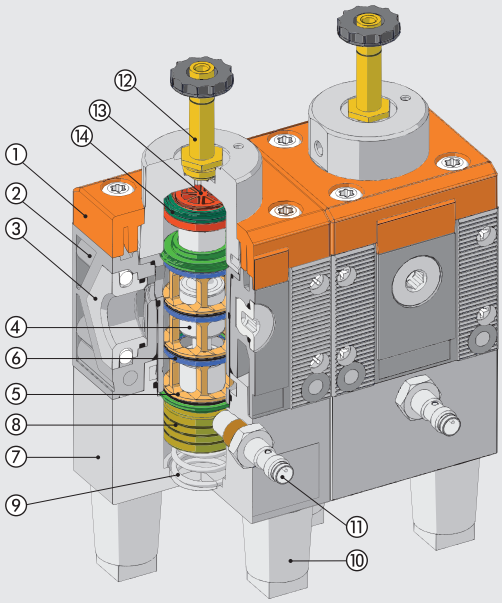

FLOW CHARTS ON DELIVERY - DOUBLE VALVE

V3V Syntesi® **SY2** 3/8"

Outlet pressure

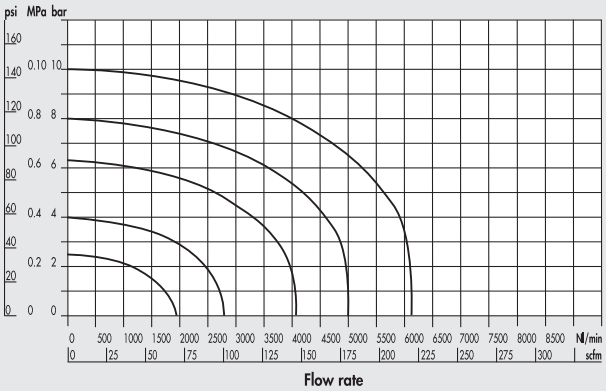

V3V Syntesi® **SY2** 1/2"- 3/4" - 1"

Outlet pressure

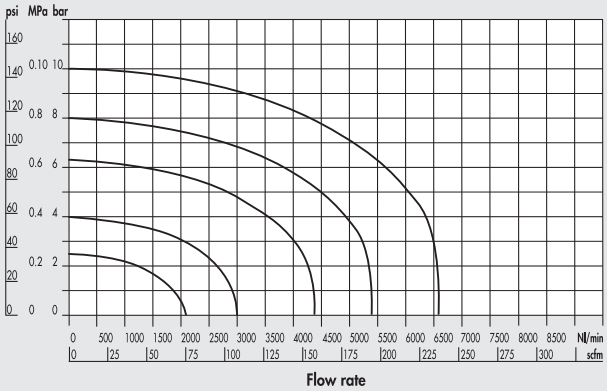

FLOW CHARTS ON RELIEF - DOUBLE VALVE

V3V Syntesi® **SY2** 3/8" - 1/2"- 3/4" - 1"

Outlet pressure

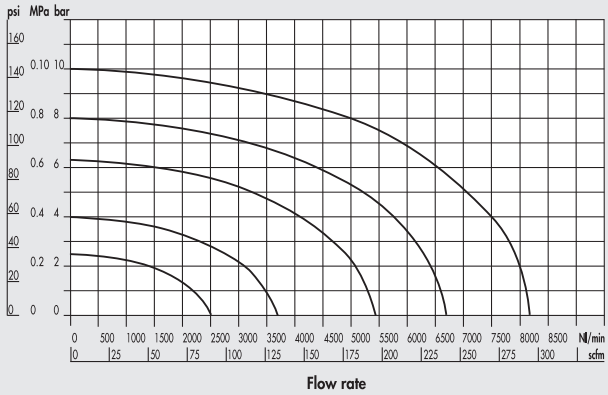

DIMENSIONS - DOUBLE VALVE

PILOT-ASSISTED VERSION

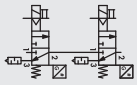

NOT PILOT-ASSISTED VERSION

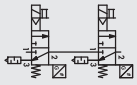

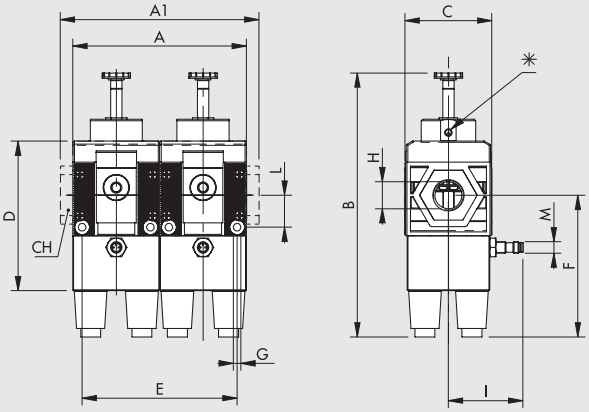

	SIZE 2			
H (threaded port)	3/8"	1/2"	3/4"	1"
A	121			
A1	-	-	217	217
B	186			
C	61			
CH	-	-	32	36
D	105			
E	108			
F	97			
G	Hole for M5 screws			
I	53			
L	22.5			
M	M8x1			
* Pilot	M5			

METAL WORK PNEUMATIC

KEY TO CODES - DOUBLE VALVE

56	2	3	W	72	3
SYNTESI	SIZE	THREADED INPUT CONNECTION	ELEMENT	TYPE	THREADED OUTPUT CONNECTION
56 Syntesi	**2** Size 2	**0** Without bushing **3** 3/8" port **4** 1/2" port **5** 3/4" port **6** 1" port	**W** Shut-off-valve Safe Air®	**32** Double solenoid pilot-assisted **72** Double solenoid	**0** Without bushing **3** 3/8" port **4** 1/2" port **5** 3/4" port **6** 1" port

PURCHASE ORDER CODES HAVING A MORE FREQUENT USE - DOUBLE VALVE

N.B. Besides the below mentioned codes, you can order elements composed at your will according to the key to codes.

Code	Description
Syntesi® SY2 SHUT-OFF-VALVES SAFE AIR®	
5620W320	V3V SY2 elpn Safe Air® double pilot-assisted without bushing
5623W323	V3V SY2 3/8 elpn double pilot-assisted Safe Air®
5624W324	V3V SY2 1/2 elpn double pilot-assisted Safe Air®
5625W325	V3V SY2 3/4 elpn double pilot-assisted Safe Air®
5626W326	V3V SY2 1 elpn double pilot-assisted Safe Air®
5620W720	V3V SY2 elpn Safe Air® double without bushing
5623W723	V3V SY2 3/8 elpn double Safe Air®
5624W724	V3V SY2 1/2 elpn double Safe Air®
5625W725	V3V SY2 3/4 elpn double Safe Air®
5626W726	V3V SY2 1 elpn double Safe Air®

NOTES

EXAMPLE OF A SAFETY CIRCUIT WITH A DOUBLE VALVE

Below is an example of a wiring diagram for controlling double valves SAFE AIR® a Metal Work using Pilz® components.
Circuit components:
- a Pilz® PNOZ® mm 0.1p modular safety system
- an emergency stop button S1 (Pilz® - PIT® es Set) linked to terminals T0-T1-I8-I9 of the PNOZ® mm 0.1p
- a Metal Work double solenoid valve SAFE AIR®, the 24 VDC coils of which are fed by terminals O0 (SV1) and O1 (SV2) of the PNOZ® mm 0.1p (the other terminals of the coils are OV); the valves' Hall-effect sensors are 24 VDC
- the sensor signals are relayed to terminals 16 (SV1) and 17 (SV2) of the PNOZ® mm 0.1p
- a start/reset button S2

Expected behaviour with the system operating correctly:
- system deactivated:
  - contacts O0 and O1 are OFF
  - the coils are de-energized
  - the sensors are ON (and hence signals to terminals 16 and 17)
  - if one of the sensors is OFF, the Pilz® module does not allow subsequent start/reset
- with the system activated via the start/reset button:
  - contacts O0 and O1 are ON
  - the coils are energized
  - the sensors are OFF (and hence signals to terminals 16 and 17)

The PNOZ® mm 0.1p module is programmed so that:
- when either sensor is OFF, and the coils are de-energized, the module does not allow subsequent restarts.
- when the valves are energized, the 2 sensors must go off within the valve actuation time, otherwise the 2 valves are switched off again.
  The programme can be downloaded from www.metalwork.it (the licence for programming Pilz® modules is not included).

All the electrical connections between the various components must comply with the applicable safety regulations.
If the emergency button is operated at a frequency of 1 actuation per hour, the circuit activates a safety function with PL = e (calculations made with the PAScal programme by Pilz®).
Responsibility for final checking that PL lies with the person assembling the circuit.

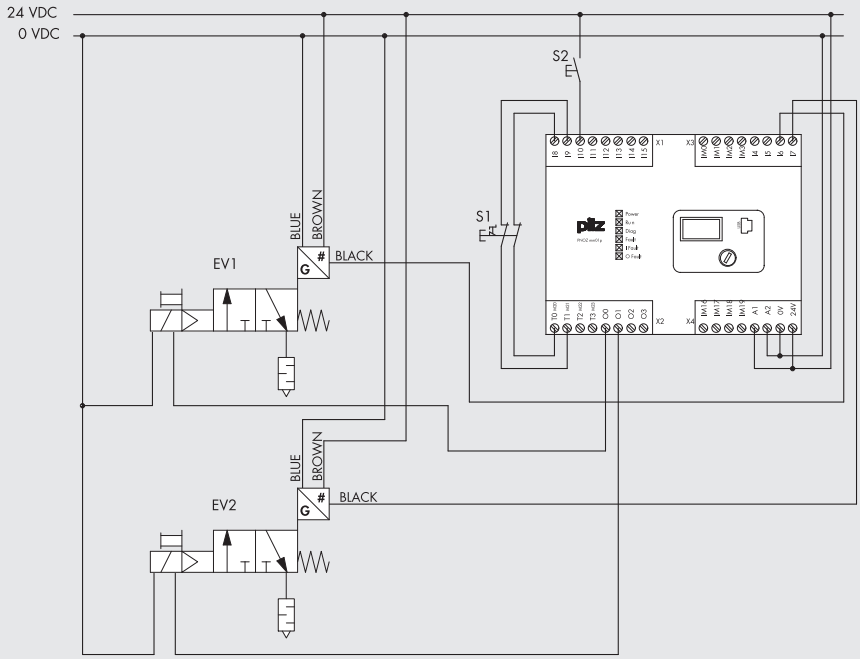

ASSEMBLY DIAGRAM V3V Syntesi® SERIES SAFE AIR®

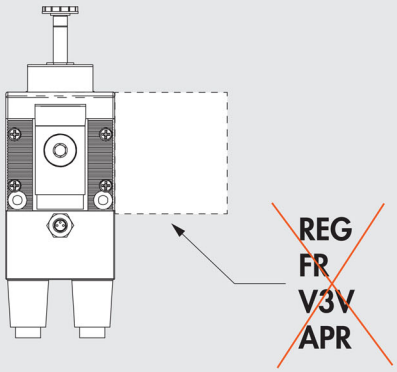

N.B. The **REG**, **FR**, **V3V**, **APR** elements **cannot be mounted** downstream the safety valves because if the elements are blocked, safety relief is not guaranteed.

SENSOR FOR V3V Syntesi® SERIES SAFE AIR®

TECHNICAL DATA SENSOR		
Type of sensor		INDUCTIVE PROXIMITY
Type of contact		N.O.
Switch		PNP
Supply voltage (Ub)	V	from 10 to 30
Voltage dro (for Ia max)	V	≤ 2
Hysteresis	%	from 3 to 20
EMC		EN 60 947-5-2
Continuous current Ia	mA	≤ 200
No load current	mA	≤ 10
Switching frequency	Hz	4000
Over-voltage suppression		Yes
Vibration and shock resistance		100 g /11 ms / 1000 cycles;; 150 g / 1 Mio cycles; from 10 to 55 Hz / 1 mm / from 55 to 500 Hz / 15 g
LED display		Yellow
Degree of protection (EN 60529)		IP68
Temperature range	°C	from -40 to +100
Sensor capsule material		Stainless steel V2A, DIN 1.4305 / AISI 303
Sensing face material		Plastic, LCP
Protection class		III
Communication interface detail		Connector male M8, 3-pin
MTTFd	years	1971
UL-File-Nr		E.181493
Certifications		CE c UL us UK CA

WIRING DIAGRAM SENSOR

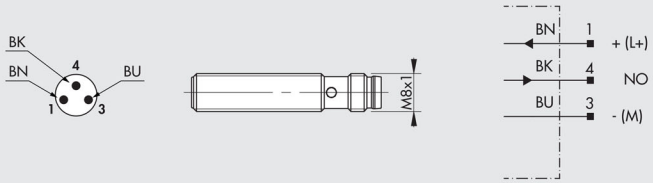

NOTES

SYNTESI® PROGRESSIVE STARTER

METAL WORK® PNEUMATIC

The progressive starter is a pneumatic component that allows air enter the circuit gradually, thereby avoiding excessive pressure bursts.
A sophisticated system of internal valves allows two separate stages of operation. During the first stage, a quantity of air that can be regulated via a pin flows from the APR. The second stage starts when the downstream pressure reached 40 to 60% of the upstream pressure, during which full-port flow is achieved. When the mechanism is deactivated, the air flow is cut off and the downstream circuit is relieved.
The progressive starter is particularly useful on machinery where it is important to prevent actuators from moving rapidly and out of control, or where, for safety reasons, the air in-feed needs to be gentle and gradual. It, however, there is a major leak in the downstream system, it may never be possible to achieve the pressure required to open the valve completely.

TECHNICAL DATA		APR SY1			APR SY2			
Threaded port		1/8″	1/4″	3/8″	3/8″	1/2″	3/4″	1″
Threaded discharge port		1/8″			1/4″			
Type of control		Solenoid			Solenoid - Cnomo solenoid			
Inlet pressure	bar	3 - 10			3 - 10			
	MPa	0.3 - 1			0.3 - 1			
	psi	43 - 145			43 - 145			
Flow rate at 6.3 bar (0.63 MPa; 91 psi) ΔP 0.5 bar (0.05 MPa; 7 psi)	Nl/min	900	1000	1100	2800	3600	3600	
	scfm	32	39	39	99	127	127	
Flow rate at 6.3 bar (0.63 MPa; 91 psi) ΔP 1 bar (0.1 MPa; 14 psi)	Nl/min	1250	1500	1600	4400	4800	4800	
	scfm	44	53	57	156	170	170	
Drain flow rate at 6.3 bar (0.63 MPa; 91 psi)	Nl/min	500			2700			
	scfm	18			96			
Maximum flow rate start-up, at 6.3 bar (0.63 MPa; 91 psi)	Nl/min	170			700			
with regulation pin completely unscrewed	scfm	6			25			
Min/max temperature at 10 bar; 1 MPa; 145 psi	°C	From -10 to +50			From -10 to +50			
Weight	g	203	198	189	503	476	472	460
Fluid		Compressed air or other inert gases						
Mounting position		In any position						
Additional air take-off, for pressure gauges or fittings		1/8″, front and rear			1/4″, front and rear			
Additional air take-off flow rate at 6.3 bar	Nl/min	500			1500			
(0.63 MPa; 91 psi) ΔP 1 bar (0.1 MPa; 14 psi)	scfm	18			53			
Wall fixing screws		No. 2 M4 screws			No. 2 M5 screws			
Coil capacity for electro-pneumatic version		12 VDC and 24 VDC = 2W; 24 VAC, 110 VAC and 220 VAC = 3.5 VA						
Hand operator		Bistable: horizontal = OFF, vertical = ON (see drawing page **C1**.40)						

COMPONENTS

① Sleeve ø8
② Anodized aluminium upper block
③ Technopolymer flange
④ Technopolymer body
⑤ IN/OUT bushing made of OT58 nickel-plated brass or passivated aluminium for 3/4″ - 1″
⑥ O-ring NBR gasket
⑦ Stainless steel valve spring
⑧ Technopolymer bottom plug
⑨ OT58 brass progressive start regulation pin
⑩ OT58 brass internal valve
⑪ Stainless steel spring stem recoveryng
⑫ OT58 brass stem
⑬ OT58 brass main valve with vulcanized gasket
⑭ OT58 brass threaded insert

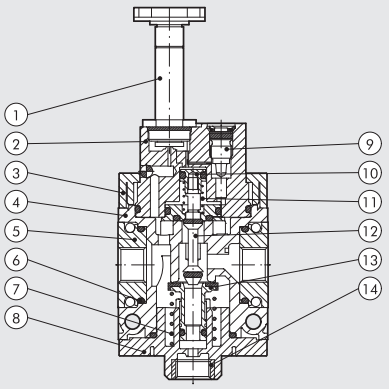

DIMENSIONS

SOLENOID **SY1-SY2**

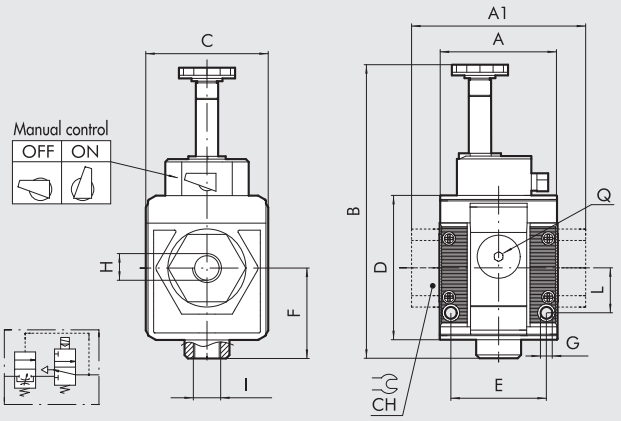

CNOMO SOLENOID **SY2**

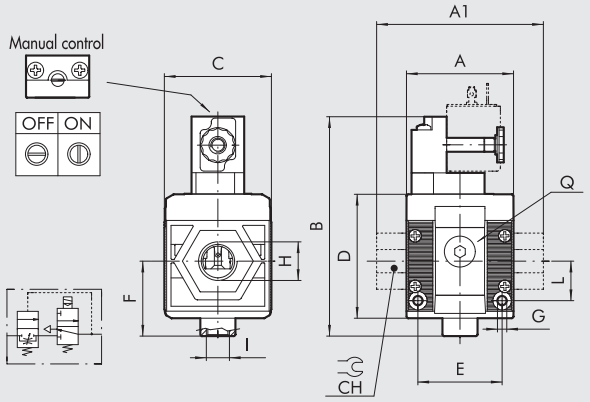

N.B.: Before assembling other Syntesi elements after the APR, remember to mount the coil on the APR itself.

	SOLENOID SIZE 1			SOLENOID / CNOMO SOLENOID SIZE 2			
H (threaded port)	1/8″	1/4″	3/8″	3/8″	1/2″	3/4″	1″
A	42			60.5			
A1	-	-	44	-	-	95	95
B	105			131			
Cnomo	-			125			
C	44			61			
CH	-			-	-	32	36
D	51.5			70.5			
E	33.5			47.5			
F	32.2			42.7			
G	Hole for M4 screws			Hole for M5 screws			
I (exhaust)	1/8″			1/4″			
L	16			22.5			
Q (no. 2 additional air takes-off)	1/8″			1/4″			

KEY TO CODES

56	1	1	A	70	1
SYNTESI	**SIZE**	**THREADED INPUT CONNECTION**	**ELEMENT**	**TYPE**	**THREADED OUTPUT CONNECTION**
56 Syntesi	**1** Size 1	**0** Without bushing **1** 1/8″ port **2** 1/4″ port **3** 3/8″ port	**A** Progressive starter APR	**70** Solenoid * **71** Cnomo solenoid	**0** Without bushing **1** 1/8″ port **2** 1/4″ port **3** 3/8″ port
	2 Size 2	**0** Without bushing **3** 3/8″ port **4** 1/2″ port **5** 3/4″ port **6** 1″ port			**0** Without bushing **3** 3/8″ port **4** 1/2″ port **5** 3/4″ port **6** 1″ port

* Only for size 2

PURCHASE ORDER CODES HAVING A MORE FREQUENT USE

N.B. Besides the below mentioned codes, you can order elements composed at your will according to the key to codes.

Code	Description	Code	Description	Code	Description
Syntesi® SY1 PROGRESSIVE STARTER		**Syntesi® SY2 PROGRESSIVE STARTER**		**Syntesi® SY2 PROGRESSIVE STARTER**	
5610A700	APR SY1 elpn without bushings	**5620A700**	APR SY2 elpn without bushings	**5620A710**	APR SY2 elpn Cnomo without bushings
5611A701	APR SY1 1/8 elpn	**5623A703**	APR SY2 3/8 elpn	**5623A713**	APR SY2 3/8 elpn Cnomo
5612A702	APR SY1 1/4 elpn	**5624A704**	APR SY2 1/2 elpn	**5624A714**	APR SY2 1/2 elpn Cnomo
5613A703	APR SY1 3/8 elpn	**5625A705**	APR SY2 3/4 elpn	**5625A715**	APR SY2 3/4 elpn Cnomo
		5626A706	APR SY2 1 elpn	**5626A716**	APR SY2 1 elpn Cnomo

SYNTESi® PRESSURE SWITCHES

METAL WORK PNEUMATIC

Syntesi® pressure switches feature a high degree of miniaturisation and a modern attractive design.
As they are extremely modular, the Syntesi® series can be installed facing up or down.
They come ready assembled with a 2-metre cable or an M8 connector with a 300-mm cable.
The contact is the switching type, which means it can be normally open or normally closed.
It can be regulated via a knurled push-lock handle.
On the front and back there is a port (1/8″ for size 1 and 1/4″ size 2) that can be used with pressure gauges or as an additional air intake.

TECHNICAL DATA		SY1 PRESSURE SWITCHES			SY2 PRESSURE SWITCHES			
Threaded port		1/8″	1/4″	3/8″	3/8″	1/2″	3/4″	1″
Adjustable pressure interval	bar	0.5 to 10			0.5 to 10			
Hysteresis (not adjustable)	bar	From 0.4 to 0.8 (See diagram)						
Maximum pressure	bar	15			13			
	MPa	1.5			1.3			
	psi	217			188			
Min/Max temperature at 10 bar; 1 MPa; 145 psi	°C	From -10 to 50			From -10 to 50			
Maximum current	A	2			2			
Maximum voltage	V	250			250			
Outside diameter of cable	mm	4.9			4.9			
Number of wires and cross section		3 x 0.5 mm^2			3 x 0.5 mm^2			
Contacts		Normally-Open (NO) and Normally-Closed (NC)						
Protection		IP65			IP65			
Number of switchings		5×10^6			5×10^6			
Fluid		Filtered lubricated or unlubricated compressed air. Lubrication, if used, must be continuous						
Mounting position		In any position						
Additional air take-off, for pressure gauges or fittings		1/8″, front and rear			1/4″, front and rear			
Additional air take-off flow rate at 6.3 bar	Nl/min	500			1500			
(0.63 MPa; 91 psi) ΔP 1 bar (0.1 MPa; 14 psi)	scfm	18			53			
Wall fixing screws		No. 2 M4 screws			No. 2 M5 screws			
Weight	g	255	250	241	443	416	412	400

COMPONENTS

① Technopolymer adjusting "push lock" handle
② OT58 brass adjusting screw
③ Steel piston spring
④ OT58 brass piston
⑤ Aluminium top plug
⑥ Technopolymer body
⑦ IN/OUT bushing made of OT58 nickel-plated brass or passivated aluminium for 3/4″ - 1″
⑧ Technopolymer bottom plug
⑨ Technopolymer pressure switch body
⑩ Resin finish for IP65
⑪ Electrical contact
⑫ O-ring NBR gasket
⑬ Technopolymer flange

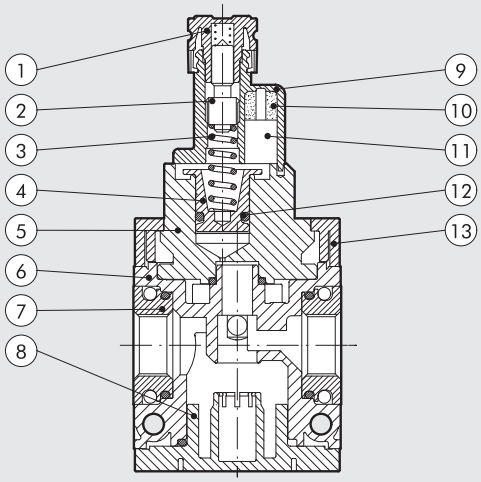

DIMENSIONS

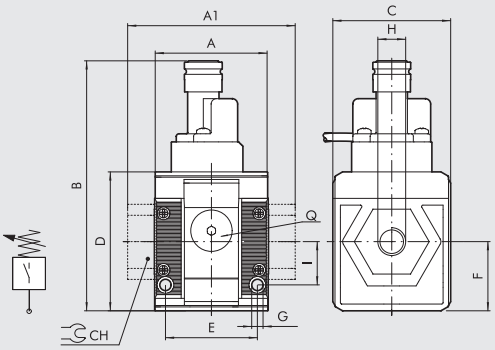

	SIZE 1			SIZE 2			
H (threaded port)	1/8″	1/4″	3/8″	3/8″	1/2″	3/4″	1″
A	42			60.5			
A1	-	-	44	-	-	95	95
B	93			101			
C	44			61			
CH	-			-	-	32	36
D	51.5			70.5			
E	33.5			47.5			
F	25.6			32.5			
G	Hole for M4 screws			Hole for M5 screws			
I	16			22.5			
Q (no. 2 additional air takes-off)	1/8″			1/4″			

HYSTERESIS GRAPH

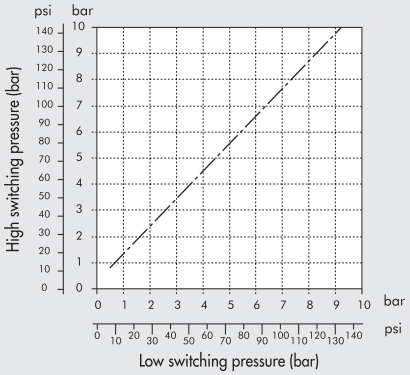

WIRING DIAGRAM

VERSION WITH CABLE

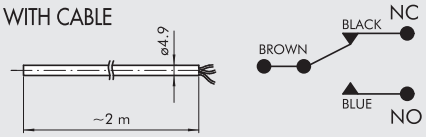

VERSION WITH M8 CONNECTOR

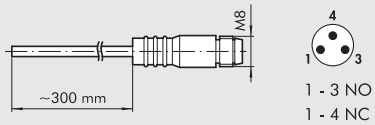

KEY TO CODES

56	1	1	S	10	1
SYNTESI	**SIZE**	**THREADED INPUT CONNECTION**	**ELEMENT**	**TYPE**	**THREADED OUTPUT CONNECTION**
56 Syntesi	**1** Size 1	**0** Without bushing **1** 1/8″ port **2** 1/4″ port **3** 3/8″ port	**S** Pressure switches	**10** 2 m cable **20** 300 mm cable with M8 connector	**0** Without bushing **1** 1/8″ port **2** 1/4″ port **3** 3/8″ port
	2 Size 2	**0** Without bushing **3** 3/8″ port **4** 1/2″ port **5** 3/4″ port **6** 1″ port			**0** Without bushing **3** 3/8″ port **4** 1/2″ port **5** 3/4″ port **6** 1″ port

PURCHASE ORDER CODES HAVING A MORE FREQUENT USE

N.B. Besides the below mentioned codes, you can order elements composed at your will according to the key to codes.

Code	Description
Syntesi® SY1 PRESSURE SWITCHES	
5610S100	Pressure switch 2 m cable SY1 without bushings
5611S101	Pressure switch 2 m cable SY1 1/8
5612S102	Pressure switch 2 m cable SY1 1/4
5613S103	Pressure switch 2 m cable SY1 3/8
5610S200	Pressure switch M8 SY1 connector without bushings
5611S201	Pressure switch M8 connector SY1 1/8
5612S202	Pressure switch M8 connector SY1 1/4
5613S203	Pressure switch M8 connector SY1 3/8

Code	Description
Syntesi® SY2 PRESSURE SWITCHES	
5620S100	Pressure switch 2 m cable SY2 without bushings
5623S103	Pressure switch 2 m cable SY2 3/8
5624S104	Pressure switch 2 m cable SY2 1/2
5625S105	Pressure switch 2 m cable SY2 3/4
5626S106	Pressure switch 2 m cable SY2 1
5620S200	Pressure switch M8 SY2 connector without bushings
5623S203	Pressure switch M8 connector SY2 3/8
5624S204	Pressure switch M8 connector SY2 1/2
5625S205	Pressure switch M8 connector SY2 3/4
5626S206	Pressure switch M8 connector SY2 1

ACCESSOIRES: SECURITY KNOB

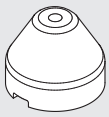

Code	Description
9200703	Security knob APR / pressure switch

NOTE: Pull outwards to remove the knob from the pressure switch on the unit. Insert the security knob and regulate the pressure switch. Then press the handle firmly to lock it in position. If the pressure switch needs to be reset, remove the security knob by forcing it laterally with a screwdriver.

SYNTESi® AIR TAKE-OFF

METAL WORK® PNEUMATIC

The air take-off is a connecting element that is mounted between two Syntesi® modules. The 2-way version, made of metal and having restrained dimensions, has a threaded port upwards and one downwards. The 4-way version, in technopolymer, has a threaded port on each side. This gives or four additional air outlets for use as required. All Syntesi® modules come with two threaded ports, one on the front and one on the back, for use as air take-off.

TECHNICAL DATA		AIR TAKE-OFF, SY1		AIR TAKE-OFF, SY2	
Version		PA 2-way	PA 4-way	PA 2-way	PA 4-way
Flow rate of the air take-off at 6.3 bar (0.63 MPa; 91 psi) ΔP 1 bar (0.1 MPa; 14 psi)	Nl/min	1550	500 - 2000	7000	1500 - 4500
	scfm	55	18 - 71	248	53 - 160
Maximum pressure	bar	15		13	
	MPa	1.5		1.3	
	psi	217		188	
Min/Max temperature at 10 bar; 1 MPa; 145 psi	°C	From -10 to 50		From -10 to 50	
Weight	g	62	100	75	306
Fluid		Compressed air or other inert gases			

DIMENSIONS

2-WAY VERSION

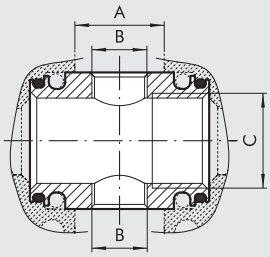

	SIZE 1	SIZE 2
A	15.5	27
B	1/8″	3/8″
C	3/8″	1/2″

4-WAY VERSION

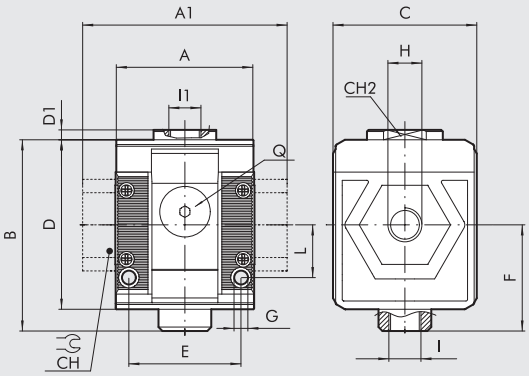

	SIZE 1			SIZE 2			
H (threaded port)	1/8″	1/4″	3/8″	3/8″	1/2″	3/4″	1″
A	42			60.5			
A1	-	-	44	-	-	95	95
B	58			81			
C	44			61			
CH	-			-	-	32	36
CH2	19			-			
D	51.5			70.5			
D1	3			-			
E	33.5			47.5			
F	32.2			42.7			
G	Hole for M4 screws			Hole for M5 screws			
I	1/8″			1/4″			
I1	1/4″			3/8″			
L	16			22.5			
Q (no. 2 add. air takes-off)	1/8″			1/4″			

KEY TO CODE FOR 4-WAY VERSION

56	1	1	P	20	1
SYNTESI	**SIZE**	**THREADED INPUT CONNECTION**	**ELEMENT**	**TYPE**	**THREADED OUTPUT CONNECTION**
56 Syntesi **5X** Syntesi anti-corrosion	**1** Size 1	**0** Without bushing **1** 1/8″ port **2** 1/4″ port **3** 3/8″ port	**P** Air take-off	**20** 4-way	**0** Without bushing **1** 1/8″ port **2** 1/4″ port **3** 3/8″ port
	2 Size 2	**0** Without bushing **3** 3/8″ port **4** 1/2″ port **5** 3/4″ port **6** 1″ port			**0** Without bushing **3** 3/8″ port **4** 1/2″ port **5** 3/4″ port **6** 1″ port

N.B. Besides the below mentioned codes, you can order elements composed at your will according to the key to codes.

PURCHASE ORDER CODES HAVING A MORE FREQUENT USE CODES

Code	Description
AIR INTAKE, 2-way version	
5610P100	PA SY1
5X10P100	PA SY1 anti-corrosion
5620P100	PA SY2
5X20P100	PA SY2 anti-corrosion

Code	Description
AIR INTAKE, 4-way version	
5610P200	PA 4-way SY1 without bushing
5611P201	PA 4-way SY1 1/8
5612P202	PA 4-way SY1 1/4
5613P203	PA 4-way SY1 3/8
5620P200	PA 4-way SY2 without bushing
5623P203	PA 4-way SY2 3/8
5624P204	PA 4-way SY2 1/2
5625P205	PA 4-way SY2 3/4
5626P206	PA 4-way SY2 1

NOTE

Anti-corrosion version

5X_ _ _ _ _ _

Example

5X11P201 PA 4-way SY1 1/8 anti-corrosion

NOTES

FR + LUB SYNTESi®

METAL WORK PNEUMATIC

For full details and list of components refer to the sections about filter-regulator and the lubricator.

TECHNICAL DATA		FR + LUB SY1			FR + LUB SY2			
Threaded port		1/8″	1/4″	3/8″	3/8″	1/2″	3/4″	1″
Degree of filtration	µm	5 (yellow) - output air purity class ISO8573-1: 3.7.-						
		20 (white) - output air purity class ISO8573-1: 4.7.-						
		50 (blue) - output air purity class ISO8573-1: 5.7.-						
Max. inlet pressure	bar	15			13			
	MPa	1.5			1.3			
	psi	217			188			
Flow rate at 6.3 bar (0.63 MPa; 91 psi) ΔP 0.5 bar (0.05 MPa; 7 psi)	Nl/min	350			1200			
(P In=10 bar)	scfm	12			42.5			
Flow rate at 6.3 bar (0.63 MPa; 91 psi) ΔP 1 bar (0.1 MPa; 14 psi)	Nl/min	1400			4000			
(P In=10 bar)	scfm	50			141.5			
Relief valve flow rate at 6.3 bar (0.63 MPa; 91 psi)	Nl/min	70			100			
	scfm	2.5			3.5			
Min/max temperature at 10 bar; 1 MPa; 145 psi	°C	From -10 to +50			From -10 to +50			
Padlockable knob		Included						
Upstream pressure compensation		Included, via balanced valve						
Weight	g	414	409	400	1074	1047	1043	1031
Fluid		Compressed air or other inert gases						
Mounting position		Vertical			Vertical			
Additional air take-off, for pressure gauges or fittings		1/8″, front and rear			1/4″, front and rear			
Additional air take-off flow rate at 6.3 bar	Nl/min	500 (FR) - 450 (LUB)			1400 (FR) - 800 (LUB)			
(0.63 MPa; 91 psi) ΔP 1 bar (0.1 MPa; 14 psi)	scfm	18 (FR) - 16 (LUB)			49.5 (FR) - 28 (LUB)			
Filter bowl capacity (condensate)	cm^3	30			70			
Quantity of filled oil	cm^3	60			130			
Condensate drain		RMSA: drain with manual condensate discharge and automatic discharge at zero pressure						
		RA: automatic drain with condensate discharge, independent of pressure and flow rate.						
		Version conveys the draining by inserting the pipe having internal diameter 6 mm in the lower port.						
		SAC: automatic drain with condensate discharge. **Operates by pressure drop – requires variable air take-offs**.						
		Note: **the maximum input pressure for the RA version must not exceed 10 bar**						
Recommended oils		ISO and UNI FD22						
		(Energol HPL; Spinesso; Mobil DTE; Tellus oil)						
Wall fixing screws		No. 2 M4 screws			No. 2 M5 screws			

DIMENSIONS

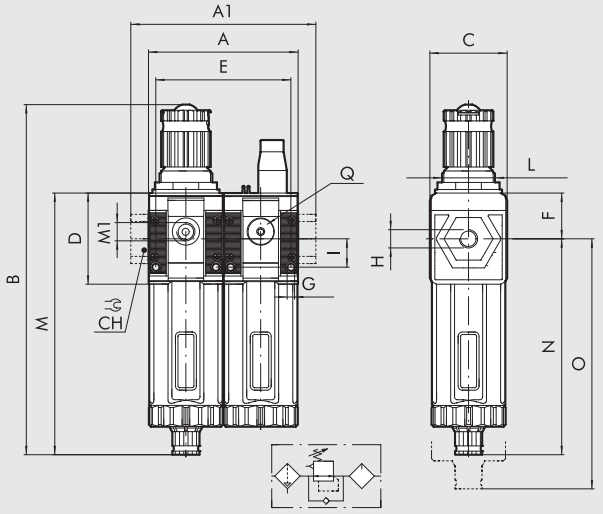

		SIZE 1			SIZE 2			
H (threaded port)		1/8″	1/4″	3/8″	3/8″	1/2″	3/4″	1″
A		84			121			
A1		-	-	86	-	-	156	156
B	RMSA	198			246			
	RA/SAC	202			250			
C		44			61			
CH		-			-	-	32	36
D		51.5			70.5			
E		75.3			108			
F		25.8			38.2			
G		Hole for M4 screws			Hole for M5 screws			
I		16			22.5			
L		M30x1.5			M38x2			
M	RMSA	148			178			
	RA/SAC	152			182			
M1 (pressure gauge port)		1/8″			1/4″			
N	RMSA	122.2			139.8			
	RA/SAC	126.2			143.8			
O	RMSA	202			245			
	RA/SAC	206			249			
Q (no. 2 additional air takes-off)		1/8″			1/4″			

KEY TO CODES

56	1	1	B	24	L	10	1
SYNTESI	SIZE	THREADED INPUT CONNECTION	ELEMENT	DEGREE OF FILTRATION, TYPE OF CONDENSATE DRAIN AND SETTING RANGE	ELEMENT	OIL FILLING	THREADED OUTPUT CONNECTION
56 Syntesi **5X** Syntesi anti-corrosion	**1** Size 1 **2** Size 2	**1** 1/8″ port **2** 1/4″ port **3** 3/8″ port **3** 3/8″ port **4** 1/2″ port **5** 3/4″ port **6** 1″ port	**B** Filter-regulator	● **10** 5 µm, RMSA, 0 to 2 bar ● **20** 20 µm, RMSA, 0 to 2 bar ● **30** 50 µm, RMSA, 0 to 2 bar ● **40** 5 µm, RA, 0 to 2 bar ● **50** 20 µm, RA, 0 to 2 bar ● **60** 50 µm, RA, 0 to 2 bar ● **11** 5 µm, SAC, 0 to 2 bar ● **21** 20 µm, SAC, 0 to 2 bar ● **31** 50 µm, SAC, 0 to 2 bar ✚ **12** 5 µm, RMSA, 0 to 4 bar ✚ **22** 20 µm, RMSA, 0 to 4 bar ✚ **32** 50 µm, RMSA, 0 to 4 bar ✚ **42** 5 µm, RA, 0 to 4 bar ✚ **52** 20 µm, RA, 0 to 4 bar ✚ **62** 50 µm, RA, 0 to 4 bar ✚ **13** 5 µm, SAC, 0 to 4 bar ✚ **23** 20 µm, SAC, 0 to 4 bar ✚ **33** 50 µm, SAC, 0 to 4 bar **14** 5 µm, RMSA, 0 to 8 bar **24** 20 µm, RMSA, 0 to 8 bar **34** 50 µm, RMSA, 0 to 8 bar **44** 5 µm, RA, 0 to 8 bar **54** 20 µm, RA, 0 to 8 bar **64** 50 µm, RA, 0 to 8 bar **15** 5 µm, SAC, 0 to 8 bar **25** 20 µm, SAC, 0 to 8 bar **35** 50 µm, SAC, 0 to 8 bar **16** 5 µm, RMSA, 0 to 12 bar **26** 20 µm, RMSA, 0 to 12 bar **36** 50 µm, RMSA, 0 to 12 bar **46** 5 µm, RA, 0 to 12 bar **56** 20 µm, RA, 0 to 12 bar **66** 50 µm, RA, 0 to 12 bar **17** 5 µm, SAC, 0 to 12 bar **27** 20 µm, SAC, 0 to 12 bar **37** 50 µm, SAC, 0 to 12 bar	**L** Lubricator	**10** Manual filling from the top	**1** 1/8″ port **2** 1/4″ port **3** 3/8″ port **3** 3/8″ port **4** 1/2″ port **5** 3/4″ port **6** 1″ port

● Not available in the anti-corrosion version.
✚ Anti-corrosion version available only in size 1.

RMSA: drain with manual condensate discharge and automatic discharge at zero pressure
RA: automatic drain with condensate discharge, independent of pressure and flow rate. Version conveys the draining by inserting the pipe having internal diameter 6 mm in the lower port.
SAC: automatic drain with condensate discharge.
Operates by pressure drop – requires variable air take-offs.

METAL WORK PNEUMATIC

PURCHASE ORDER CODES HAVING A MORE FREQUENT USE

N.B. Besides the below mentioned codes, you can order elements composed at your will according to the key to codes.

Code	Description
FR + LUB Syntesi® SY1	
5611B24L101	FR+LUB SY1 1/8 20 08 RMSA
5611B54L101	FR+LUB SY1 1/8 20 08 RA
5612B24L102	FR+LUB SY1 1/4 20 08 RMSA
5612B54L102	FR+LUB SY1 1/4 20 08 RA
5613B24L103	FR+LUB SY1 3/8 20 08 RMSA
5613B54L103	FR+LUB SY1 3/8 20 08 RA

Code	Description
FR + LUB Syntesi® SY2	
5623B24L103	FR+LUB SY2 3/8 20 08 RMSA
5623B54L103	FR+LUB SY2 3/8 20 08 RA
5624B24L104	FR+LUB SY2 1/2 20 08 RMSA
5624B54L104	FR+LUB SY2 1/2 20 08 RA
5625B24L105	FR+LUB SY2 3/4 20 08 RMSA
5625B54L105	FR+LUB SY2 3/4 20 08 RA
5626B24L106	FR+LUB SY2 1 20 08 RMSA
5626B54L106	FR+LUB SY2 1 20 08 RA

NOTE

Anti-corrosion version

5X_ _ _ _ _ _

Example

5X11B54L101 FR+LUB SY1 1/8 20 08 RA anti-corrosion

NOTES

V3V + FR + LUB SYNTESi®

For full details and list of components refer to the sections about shut-off valve, filter-regulator and lubricator.

TECHNICAL DATA		V3V + FR + LUB SY1			V3V + FR + LUB SY2			
Threaded port		1/8′	1/4″	3/8″	3/8″	1/2″	3/4″	1″
Degree of filtration	µm	5 (yellow) - output air purity class ISO8573-1: 3.7.-						
		20 (white) - output air purity class ISO8573-1: 4.7.-						
		50 (blue) - output air purity class ISO8573-1: 5.7.-						
Max. inlet pressure	bar	15			13			
	MPa	1.5			1.3			
	psi	217			188			
Flow rate at 6.3 bar (0.63 MPa; 91 psi) ΔP 0.5 bar (0.05 MPa; 7 psi)	Nl/min	250			1200			
(P In=10 bar)	scfm	9			42.5			
Flow rate at 6.3 bar (0.63 MPa; 91 psi) ΔP 1 bar (0.1 MPa; 14 psi)	Nl/min	1050			4000			
(P In=10 bar)	scfm	37			141.5			
Relief valve flow rate at 6.3 bar (0.63 MPa; 91 psi)	Nl/min	70			100			
	scfm	2.5			3.5			
Min/max temperature at 10 bar; 1 MPa; 145 psi	°C	From -10 to +50			From -10 to +50			
Full outflow with zero inlet pressure		Included			Included			
Drain flow rate at 6.3 bar (0.63 MPa; 91 psi)	Nl/min	500			2000			
	scfm	18			71			
Padlockable knob		Included with both V3V and regulator						
Upstream pressure compensation		Included, via balanced valve						
Weight	g	598	593	584	1479	1452	1448	1436
Fluid		Compressed air or other inert gases						
Mounting position		Vertical			Vertical			
Additional air take-off, for pressure gauges or fittings		1/8″, front and rear			1/4″, front and rear			
Additional air take-off flow rate at 6.3 bar	Nl/min	500 (V3V) - 500 (FR) - 450 (LUB)			1500 (V3V) - 1400 (FR) - 800 (LUB)			
(0.63 MPa; 91 psi) ΔP 1 bar (0.1 MPa; 14 psi)	scfm	18 (V3V) - 18 (FR) - 16 (LUB)			53 (V3V) - 49.5 (FR) - 28 (LUB)			
Filter bowl capacity	cm^3	30			70			
Quantity of filled oil	cm^3	60			130			
Condensate drain		RMSA: drain with manual condensate discharge and automatic discharge at zero pressure						
		RA: automatic drain with condensate discharge, independent of pressure and flow rate.						
		Version conveys the draining by inserting the pipe having internal diameter 6 mm in the lower port.						
		SAC: automatic drain with condensate discharge. **Operates by pressure drop – requires variable air take-offs**.						
		Note: **the maximum input pressure for the RA version must not exceed 10 bar**						
Recommended oils		ISO and UNI FD22						
		(Energol HPL; Spinesso; Mobil DTE; Tellus oil)						
Wall fixing screws		No. 2 M4 screws			No. 2 M5 screws			

METAL WORK PNEUMATIC

OVERALL DIMENSIONS

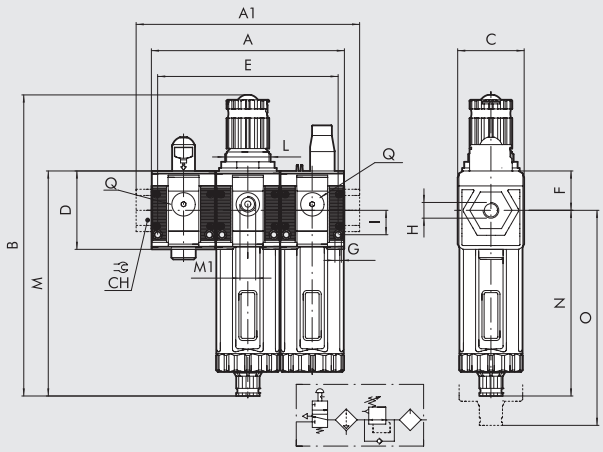

		SIZE 1			SIZE 2			
H (threaded port)		1/8″	1/4″	3/8″	3/8″	1/2″	3/4″	1″
A		126			181.5			
A1		-	-	128	-	-	217	217
B	RMSA	198			246			
	RA/SAC	202			250			
C		44			61			
CH		-			-	-	32	36
D		51.5			70.5			
E		117.1			168.5			
F		25.8			38.2			
G		Hole for M4 screws			Hole for M5 screws			
I		16			22.5			
L		M30x1.5			M38x2			
M	RMSA	148			178			
	RA/SAC	152			182			
M1 (pressure gauge port)		1/8″			1/4″			
N	RMSA	122.2			139.8			
	RA/SAC	126.2			143.8			
O	RMSA	202			245			
	RA/SAC	206			249			
Q (no. 2 additional air takes-off)		1/8″			1/4″			

KEY TO CODES

56	1	1	V	10	B	24	L	10	1
SYNTESI	SIZE	THREADED INPUT CONNECTION	ELEMENT	TYPE	ELEMENT	DEGREE OF FILTRATION, TYPE OF CONDENSATE DRAIN AND SETTING RANGE	ELEMENT	OIL FILLING	THREADED OUTPUT CONNECTION
56 Syntesi **5X** Syntesi anti-corrosion	**1** Size 1 **2** Size 2	**1** 1/8″ port **2** 1/4″ port **3** 3/8″ port **3** 3/8″ port **4** 1/2″ port **5** 3/4″ port **6** 1″ port	**V** V3V	**10** Manual with Ø3.5 hole for padlocks **11** Manual with Ø7 hole for padlock	**B** Filter-regulator	● **10** 5 µm, RMSA, 0 to 2 bar ● **20** 20 µm, RMSA, 0 to 2 bar ● **30** 50 µm, RMSA, 0 to 2 bar ● **40** 5 µm, RA, 0 to 2 bar ● **50** 20 µm, RA, 0 to 2 bar ● **60** 50 µm, RA, 0 to 2 bar ● **11** 5 µm, SAC, 0 to 2 bar ● **21** 20 µm, SAC, 0 to 2 bar ● **31** 50 µm, SAC, 0 to 2 bar ✚ **12** 5 µm, RMSA, 0 to 4 bar ✚ **22** 20 µm, RMSA, 0 to 4 bar ✚ **32** 50 µm, RMSA, 0 to 4 bar ✚ **42** 5 µm, RA, 0 to 4 bar ✚ **52** 20 µm, RA, 0 to 4 bar ✚ **62** 50 µm, RA, 0 to 4 bar ✚ **13** 5 µm, SAC, 0 to 4 bar ✚ **23** 20 µm, SAC, 0 to 4 bar ✚ **33** 50 µm, SAC, 0 to 4 bar **14** 5 µm, RMSA, 0 to 8 bar **24** 20 µm, RMSA, 0 to 8 bar **34** 50 µm, RMSA, 0 to 8 bar **44** 5 µm, RA, 0 to 8 bar **54** 20 µm, RA, 0 to 8 bar **64** 50 µm, RA, 0 to 8 bar **15** 5 µm, SAC, 0 to 8 bar **25** 20 µm, SAC, 0 to 8 bar **35** 50 µm, SAC, 0 to 8 bar **16** 5 µm, RMSA, 0 to 12 bar **26** 20 µm, RMSA, 0 to 12 bar **36** 50 µm, RMSA, 0 to 12 bar **46** 5 µm, RA, 0 to 12 bar **56** 20 µm, RA, 0 to 12 bar **66** 50 µm, RA, 0 to 12 bar **17** 5 µm, SAC, 0 to 12 bar **27** 20 µm, SAC, 0 to 12 bar **37** 50 µm, SAC, 0 to 12 bar	**L** Lubricator	**10** Manual filling from the top	**1** 1/8″ port **2** 1/4″ port **3** 3/8″ port **3** 3/8″ port **4** 1/2″ port **5** 3/4″ port **6** 1″ port

● Not available in the anti-corrosion version.
✚ Anti-corrosion version available only in size 1.
RMSA: drain with manual condensate discharge and automatic discharge at zero pressure.
RA: automatic drain with condensate discharge, independent of pressure and flow rate. Version conveys the draining by inserting the pipe having internal diameter 6 mm in the lower port.
SAC: automatic drain with condensate discharge. **Operates by pressure drop – requires variable air take-offs**.

PURCHASE ORDER CODES HAVING A MORE FREQUENT USE

N.B. Besides the below mentioned codes, you can order elements composed at your will according to the key to codes.

Code	Description
V3V + FR + LUB Syntesi® SY1	
5611V10B24L101	V3V+FR+LUB SY1 1/8 20 08 RMSA
5611V10B54L101	V3V+FR+LUB SY1 1/8 20 08 RA
5612V10B24L102	V3V+FR+LUB SY1 1/4 20 08 RMSA
5612V10B54L102	V3V+FR+LUB SY1 1/4 20 08 RA
5613V10B24L103	V3V+FR+LUB SY1 3/8 20 08 RMSA
5613V10B54L103	V3V+FR+LUB SY1 3/8 20 08 RA

Code	Description
V3V + FR + LUB Syntesi® SY2	
5623V10B24L103	V3V+FR+LUB SY2 3/8 20 08 RMSA
5623V10B54L103	V3V+FR+LUB SY2 3/8 20 08 RA
5624V10B24L104	V3V+FR+LUB SY2 1/2 20 08 RMSA
5624V10B54L104	V3V+FR+LUB SY2 1/2 20 08 RA
5625V10B24L105	V3V+FR+LUB SY2 3/4 20 08 RMSA
5625V10B54L105	V3V+FR+LUB SY2 3/4 20 08 RA
5626V10B24L106	V3V+FR+LUB SY2 1 20 08 RMSA
5626V10B54L106	V3V+FR+LUB SY2 1 20 08 RA

NOTE

Anti-corrosion version

5X_ _ _ _ _ _

Example

5X11V10B54L101 V3V+FR+LUB SY1 1/8 20 08 RA anti-corrosion

NOTES

FIL + DEP SYNTESi®

METAL WORK PNEUMATIC

For full details and list of components refer to the sections about filter and depurator.

TECHNICAL DATA		FIL + DEP SY1			FIL + DEP SY2			
Threaded port		1/8″	1/4″	3/8″	3/8″	1/2″	3/4″	1″
Purifier degree of filtration	µm	0.01 - output air purity class ISO8573-1: 1.7.2						
		1 - output air purity class ISO8573-1: 3.7.3						
Filter degree of filtration	µm	5 (yellow)						
Max. inlet pressure	bar	15			13			
	MPa	1.5			1.3			
	psi	217			188			
Suggested flow rate at 6.3 bar (0.63 MPa; 91 psi)	Nl/min	550			1050			
	scfm	9			37			
Maximun suggested flow rate		Look a the chart on the depurator page **C1**.12			Look a the chart on the depurator page **C1**.12 / **C1**.13			
		N.B.: flow rates higher than the recommended value reduces purification efficiency						
Min/max temperature at 10 bar; 1 MPa; 145 psi	°C	From -10 to +50			From -10 to +50			
Weight	g	358	353	344	942	915	911	899
Purifier condensate drain		RMSA: drain with manual condensate discharge and automatic discharge at zero pressure						
Filter condensate drain		RMSA: drain with manual condensate discharge and automatic discharge at zero pressure						
		RA: automatic drain with condensate discharge, independent of pressure and flow rate.						
		Version conveys the draining by inserting the pipe having internal diameter 6 mm in the lower port.						
		SAC: automatic drain with condensate discharge. **Operates by pressure drop – requires variable air take-offs**.						
		Note: **the maximum input pressure for the RA version must not exceed 10 bar**						
Fluid		Compressed air or other inert gases						
Bowl capacity filter/depurator	cm^3	30/15			70/40			
Mounting position		Vertical			Vertical			
Port for additional air take-off		1/8″, front and rear			1/4″, front and rear			
Additional air take-off flow rate (not purified air)	Nl/min	500			1500			
at 6.3 bar (0.63 MPa; 91 psi) ΔP 1 bar (0.1 MPa; 14 psi)	scfm	18			53			
Wall fixing screws		No. 2 M4 screws			No. 2 M5 screws			

DIMENSIONS

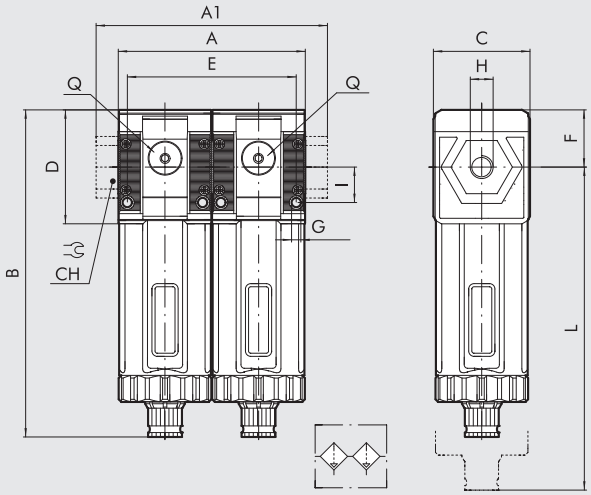

		SIZE 1			SIZE 2			
H (threaded port)		1/8″	1/4″	3/8″	3/8″	1/2″	3/4″	1″
A		84			121			
A1		-	-	86	-	-	217	217
B	RMSA	148			178			
	RA/SAC	152			182			
C		44			61			
CH		-			-	-	32	36
D		51.5			70.5			
E		75.3			108			
F		25.8			38.2			
G		Hole for M4 screws			Hole for M5 screws			
I		16			22.5			
L	RMSA	202			245			
	RA/SAC	206			249			
Q (no. 2 additional air takes-off)		1/8″			1/4″			

KEY TO CODES

56	1	1	F	10	D	10	1
SYNTESI	SIZE	THREADED INPUT CONNECTION	ELEMENT	DEGREE OF FILTRATION AND TYPE OF CONDENSATE DRAIN	ELEMENT	TYPE	THREADED OUTPUT CONNECTION
56 Syntesi **5X** Syntesi anti-corrosion	**1** Size 1 **2** Size 2	**1** 1/8″ port **2** 1/4″ port **3** 3/8″ port **3** 3/8″ port **4** 1/2″ port **5** 3/4″ port **6** 1″ port	**F** Filter	**10** 5 µm, RMSA **40** 5 µm, RA **11** 5 µm, SAC	**D** Depurator	**10** 0.01 µm RMSA **11** 0.01 µm SAC **30** 1 µm RMSA **31** 1 µm SAC	**1** 1/8″ port **2** 1/4″ port **3** 3/8″ port **3** 3/8″ port **4** 1/2″ port **5** 3/4″ port **6** 1″ port

RMSA: drain with manual condensate discharge and automatic discharge at zero pressure.
RA: automatic drain with condensate discharge, independent of pressure and flow rate. Version conveys the draining by inserting the pipe having internal diameter 6 mm in the lower port.
SAC: automatic drain with condensate discharge. **Operates by pressure drop – requires variable air take-offs**.

PURCHASE ORDER CODES HAVING A MORE FREQUENT USE

N.B. Besides the below mentioned codes, you can order elements composed at your will according to the key to codes.

Code	Description	Code	Description	NOTE
FIL + DEP Syntesi® SY1		**FIL + DEP Syntesi® SY2**		**Anti-corrosion version**
5611F10D101	FIL+DEP SY1 1/8 05 RMSA	**5623F10D103**	FIL+DEP SY2 3/8 05 RMSA	**5X**_ _ _ _ _ _
5611F40D101	FIL+DEP SY1 1/8 05 RA	**5623F40D103**	FIL+DEP SY2 3/8 05 RA	**Example**
				5X11F40D101 FIL+DEP SY1 1/8 05 RA anti-corrosion
5612F10D102	FIL+DEP SY1 1/4 05 RMSA	**5624F10D104**	FIL+DEP SY2 1/2 05 RMSA	
5612F40D102	FIL+DEP SY1 1/4 05 RA	**5624F40D104**	FIL+DEP SY2 1/2 05 RA	
5613F10D103	FIL+DEP SY1 3/8 05 RMSA	**5625F10D105**	FIL+DEP SY2 3/4 05 RMSA	
5613F40D103	FIL+DEP SY1 3/8 05 RA	**5625F40D105**	FIL+DEP SY2 3/4 05 RA	
		5626F10D106	FIL+DEP SY2 1 05 RMSA	
		5626F40D106	FIL+DEP SY2 1 05 RA	

FIL + LUB SYNTESi®

METAL WORK PNEUMATIC

For full details and list of components refer to the sections about filter and lubricator.

TECHNICAL DATA		FIL + LUB SY1			FIL + LUB SY2			
Threaded port		1/8″	1/4″	3/8″	3/8″	1/2″	3/4″	1″
Degree of filtration	µm	5 (yellow) - output air purity class ISO8573-1: 3.7.-						
		20 (white) - output air purity class ISO8573-1: 4.7.-						
		50 (blue) - output air purity class ISO8573-1: 5.7.-						
Max. inlet pressure	bar	15			13			
	MPa	1.5			1.3			
	psi	217			188			
Flow rate at 6.3 bar (0.63 MPa; 91 psi) ΔP 0.5 bar (0.05 MPa; 7 psi)	Nl/min	860			2900			
	scfm	30			102.5			
Flow rate at 6.3 bar (0.63 MPa; 91 psi) ΔP 1 bar (0.1 MPa; 14 psi)	Nl/min	1450			4400			
	scfm	51			156			
Min/max temperature at 10 bar; 1 MPa; 145 psi	°C	From -10 to +50			From -10 to +50			
Weight	g	349	344	355	840	813	809	797
Fluid		Compressed air or other inert gases						
Mounting position		Vertical			Vertical			
Additional air take-off, for pressure gauges or fittings		1/8″, front and rear			1/4″, front and rear			
Additional air take-off flow rate at 6.3 bar	Nl/min	500 - 450			1500 - 800			
(0.63 MPa; 91 psi) ΔP 1 bar (0.1 MPa; 14 psi)	scfm	18 - 16			53 - 28			
Filter bowl capacity (condensate)	cm^3	30			70			
Quantity of filled oil	cm^3	60			130			
Condensate drain		RMSA: drain with manual condensate discharge and automatic discharge at zero pressure						
		RA: automatic drain with condensate discharge, independent of pressure and flow rate.						
		Version conveys the draining by inserting the pipe having internal diameter 6 mm in the lower port.						
		SAC: automatic drain with condensate discharge. **Operates by pressure drop – requires variable air take-offs**.						
		Note: **the maximum input pressure for the RA version must not exceed 10 bar**						
Recommended oils		ISO and UNI FD22						
		(Energol HPL; Spinesso; Mobil DTE; Tellus oil)						
Wall fixing screws		No. 2 M4 screws			No. 2 M5 screws			

DIMENSIONS

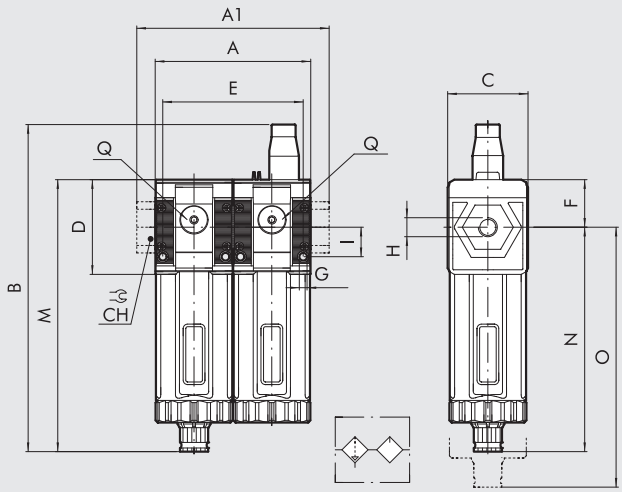

		SIZE 1			SIZE 2			
H (threaded port)		1/8″	1/4″	3/8″	3/8″	1/2″	3/4″	1″
A		84			121			
A1		-	-	86	-	-	156	156
B	RMSA	117.5			208			
	RA/SAC	121.5			212			
C		44			61			
CH		-			-	-	32	36
D		51.5			70.5			
E		75.3			108			
F		25.8			38.2			
G		Hole for M4 screws			Hole for M5 screws			
I		16			22.5			
M	RMSA	148			178			
	RA/SAC	152			182			
N	RMSA	122.2			139.8			
	RA/SAC	126.2			143.8			
O	RMSA	202			245			
	RA/SAC	206			249			
Q (no. 2 additional air takes-off)		1/8″			1/4″			

KEY TO CODES

56	1	1	F	10	L	10	1
SYNTESI	SIZE	THREADED INPUT CONNECTION	ELEMENT	DEGREE OF FILTRATION AND TYPE OF CONDENSATE DRAIN	ELEMENT	OIL FILLING	THREADED OUTPUT CONNECTION
56 Syntesi **5X** Syntesi anti-corrosion	**1** Size 1 **2** Size 2	**1** 1/8″ port **2** 1/4″ port **3** 3/8″ port **3** 3/8″ port **4** 1/2″ port **5** 3/4″ port **6** 1″ port	**F** Filter	**10** 5 µm, RMSA **20** 20 µm, RMSA **30** 50 µm, RMSA **40** 5 µm, RA **50** 20 µm, RA **60** 50 µm, RA **11** 5 µm, SAC **21** 20 µm, SAC **31** 50 µm, SAC	**L** Lubricator	**10** Manual filling from the top	**1** 1/8″ port **2** 1/4″ port **3** 3/8″ port **3** 3/8″ port **4** 1/2″ port **5** 3/4″ port **6** 1″ port

RMSA: drain with manual condensate discharge and automatic discharge at zero pressure.
RA: automatic drain with condensate discharge, independent of pressure and flow rate. Version conveys the draining by inserting the pipe having internal diameter 6 mm in the lower port.
SAC: automatic drain with condensate discharge. **Operates by pressure drop – requires variable air take-offs**.

PURCHASE ORDER CODES HAVING A MORE FREQUENT USE

N.B. Besides the below mentioned codes, you can order elements composed at your will according to the key to codes.

Code	Description	Code	Description	NOTE
FIL + LUB Syntesi® SY1		**FIL + LUB Syntesi® SY2**		**Anti-corrosion version**
5611F20L101	FIL+LUB SY1 1/8 20 RMSA	**5623F20L103**	FIL+LUB SY2 3/8 20 RMSA	**5X**_ _ _ _ _ _
5611F50L101	FIL+LUB SY1 1/8 20 RA	**5623F50L103**	FIL+LUB SY2 3/8 20 RA	**Example**
				5X11F50L101 FIL+LUB SY1 1/8 20 RA anti-corrosion
5612F20L102	FIL+LUB SY1 1/4 20 RMSA	**5624F20L104**	FIL+LUB SY2 1/2 20 RMSA	
5612F50L102	FIL+LUB SY1 1/4 20 RA	**5624F50L104**	FIL+LUB SY2 1/2 20 RA	
5613F20L103	FIL+LUB SY1 3/8 20 RMSA	**5625F20L105**	FIL+LUB SY2 3/4 20 RMSA	
5613F50L103	FIL+LUB SY1 3/8 20 RA	**5625F50L105**	FIL+LUB SY2 3/4 20 RA	
		5626F20L106	FIL+LUB SY2 1 20 RMSA	
		5626F50L106	FIL+LUB SY2 1 20 RA	

SYNTESI® ACCESSORIES

METAL WORK® PNEUMATIC

MOUNTING BRACKET FOR REG. AND FR KNOB

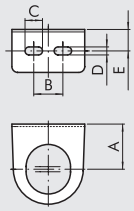

Code	Description
9200701	SF100 - BIT-ND 1/4 - SY1
9400701	SF200 - ND-3/8 1/2 - SY2

Code	A	B	C	D	E
9200701	32	20	12	5.5	14.2
9400701	42	40	12	5.5	15

MOUNTING BRACKET

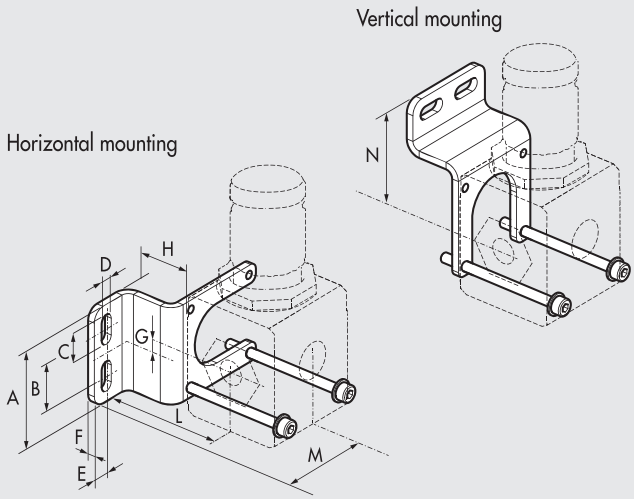

Code	Description
9200716X	Mounting bracket SY1
9200717X	Mounting bracket SY2

Note: Supplie complete with screws and washers.
Max torque 0.8 Nm for SY1 - Max torque 2.0 Nm for SY2
Codes to be used for units in the standard and the anti-corrosion version

Code	A	B	C	D	E	F	G	H	L	M	N
9200716X	41.5	20	12.7	5.5	7	3	0.8	25	43.8	46.5	47
9200717X	60	40	12.7	5.5	8	3	1.3	30	57.5	58.3	59.5

CONNECTION BRACKETS ON THE BAR (DIN EN50022)

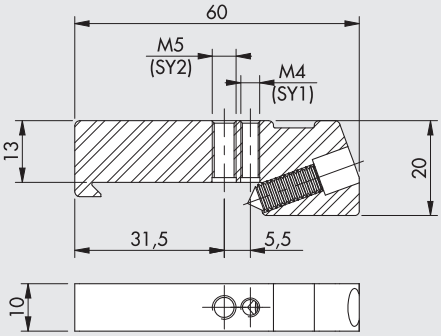

Code	Description
9200718X	Connection brackets on DIN bar, SY1 - SY2

Note: 2 pieces per pack complete with screws and washers.
Max torque 0.8 Nm for SY1 - Max torque 2.0 Nm for SY2
Codes to be used for units in the standard and the anti-corrosion version

PRESSURE GAUGES

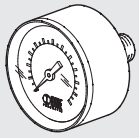

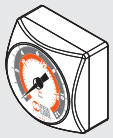

Code	Description
9700101	M 40 1/8 012
9700102	M 40 1/8 04
9800101	M 50 1/8 012
9800102	M 50 1/8 04
9900101	M 63 1/4 012
9700109	M 40x40 1/8 04
9700110	M 40x40 1/8 012

ADAPTERS FOR PRESSURE GAUGES (SY2)

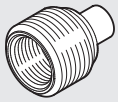

Code	Description
9210005	1/4 adapter for 1/8 pressure gauge

COIL 22 mm FOR APR AND V3V ELPN

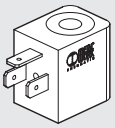

Code	Description
W0215000151	Coil 22 Ø 8 BA 2W-12VDC
W0215000101	Coil 22 Ø 8 BA 2W-24VDC
W0215000111	Coil 22 Ø 8 BA 3.5VA-24VAC
W0215000121	Coil 22 Ø 8 BA 3.5VA-110VAC
W0215000131	Coil 22 Ø 8 BA 3.5VA-220VAC

Electrical connection DIN 43650 B-IND

"UL" AND "CSA" COILS 22 mm

c UL us

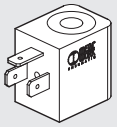

Code	Description
W0215000251	Coil 22 Ø 8 BA 2W-12VDC UR
W0215000201	Coil 22 Ø 8 BA 2W-24VDC UR
W0215000211	Coil 22 Ø 8 BA 3.5VA-24VAC UR
W0215000221	Coil 22 Ø 8 BA 3.5VA-110VAC UR
W0215000231	Coil 22 Ø 8 BA 3.5VA-220VAC UR

Electrical connection DIN 43650 B-IND

COIL 30 mm FOR APR AND V3V ELPN

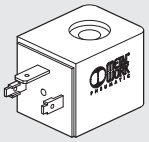

Code	Description
W0210010100	Coil 30 Ø 8 2W-24VDC
W0210011100	Coil 30 Ø 8 3.5VA-24VAC 50/60 HZ
W0210012100	Coil 30 Ø 8 3.5VA-110VAC 50/60 HZ
W0210013100	Coil 30 Ø 8 3.5VA-220VAC 50/60 HZ

Electrical connection DIN 43650 - A

KIT FOR COIL EEXM

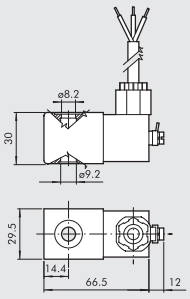

Code	Description
0227606913	Kit for coil 30 24 VDC EEXMT5 cable 3 m
0227606915	Kit for coil 30 24 VDC EEXMT5 cable 5 m
0227608013	Kit for coil 30 24 VAC EEXMT5 cable 3 m
0227608015	Kit for coil 30 24 VAC EEXMT5 cable 5 m
0227608023	Kit for coil 30 110 VAC EEXMT5 cable 3 m
0227608025	Kit for coil 30 110 VAC EEXMT5 cable 5 m
0227608033	Kit for coil 30 230 VAC EEXMT5 cable 3 m
0227608035	Kit for coil 30 230 VAC EEXMT5 cable 5 m

Atex (2014/34/EU), IECEx and CCC certified coils:
Ⓔx II 2G Ex mb IIC T4/T5 Gb
Ⓔx II 2D Ex tb IIIC T130/T95 °C Db
N.B.: Supplied complete with adapter for Ø8 mm sleeve

ELECTRIC CONNECTOR 22 mm FOR COILS DIN 43650 B-IND

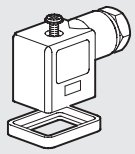

Code	Description
W0970510011	Connector standard
W0970510012	Connector 22 LED 24V
W0970510013	Connector 22 LED 110V
W0970510014	Connector 22 LED 220V
W0970510015	Connector 22 LED VDR 24V
W0970510016	Connector 22 LED VDR 110V
W0970510017	Connector 22 LED VDR 220V
W0970510070	Connector 22 ATEX II 2 GD

Code	Description
W0970510051	Connector 22 LED 24VDC Energy Saving

For technical data see page **B1**.61

ELECTRIC CONNECTOR 30 mm FOR COILS DIN 43650-A

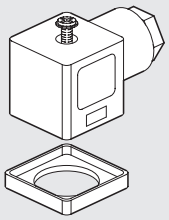

Code	Description
W0970520033	Connector 30 STD
W0970520034	Connector 30 LED 24V
W0970520035	Connector 30 LED 110V
W0970520036	Connector 30 LED 220V
W0970520037	Connector 30 LED VDR 24V
W0970520038	Connector 30 LED VDR 110V
W0970520039	Connector 30 LED VDR 220V
W0970520070	Connector 30 ATEX II 2GD

M8 STRAIGHT CONNECTOR WITH CABLE FOR PRESSURE SWITCHES AND V3V SAFE AIR®

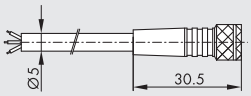

Pin	Cable color
1	Brown
3	Blue
4	Black

Code	Description
02400A0100	M8 female 3 PIN HIGH FLEX CL6 connector with cable L = 1 m
02400A0250	M8 female 3 PIN HIGH FLEX CL6 connector with cable L = 2.5 m
02400A0500	M8 female 3 PIN HIGH FLEX CL6 connector with cable L = 5 m
02400A1000	M8 female 3 PIN HIGH FLEX CL6 connector with cable L = 10 m

Very flexible cables, class 6 according to IEC 60228

M8 90° CONNECTOR WITH CABLE FOR V3V SAFE AIR®

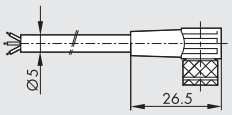

Pin	Cable color
1	Brown
3	Blue
4	Black

Code	Description
02400B0100	M8 female 3 PIN 90° HIGH FLEX CL6 connector with cable L = 1 m
02400B0250	M8 female 3 PIN 90° HIGH FLEX CL6 connector with cable L = 2.5 m
02400B0500	M8 female 3 PIN 90° HIGH FLEX CL6 connector with cable L = 5 m
02400B1000	M8 female 3 PIN 90° HIGH FLEX CL6 connector with cable L = 10 m

Note: Very flexible cables, class 6 according to IEC 60228

M8 ADAPTER CABLE FOR CONNECTING THE PRESSURE SWITCH TO THE EB 80 E CM DIGITAL INPUTS MODULE

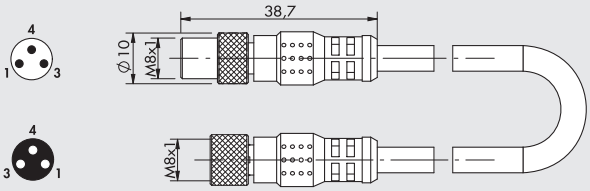

Code	Description
0240010501	M8-M, M8-F 3-pole adapter with cable L = 0.3 m

Note: Can be used to connect the pressure switch to the module of digital INPUT **S01** of the EB 80 valves, to the additional M8 INPUT module of the CM valves and to the Profibus-DP IP67 M8 input. Contact type NO (Normally open).

M8F	M8M	Function
pin 1	pin 1	Power supply +
pin 3	pin 4	Signal NO
pin 4	pin 3	Disconnect

KIT COIL SIDE 22 IP65

Code	Description
0222100100	Kit for coils 22 - IP65

Improved IP65 protection, even after prolonged exposure to atmospheric agents.

THREADED PORT

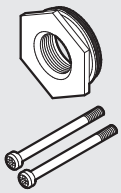

Code	Description
9210001	Kit IN OUT 1/8 SY1
9210002	Kit IN OUT 1/4 SY1
9210003	Kit IN OUT 3/8 SY1
9210011	Kit IN OUT 3/8 SY2
9210012	Kit IN OUT 1/2 SY2
9210013	Kit IN OUT 3/4 SY2
9210014	Kit IN OUT 1 SY2
9210001X	Kit IN OUT 1/8 SY1 anti-corrosion
9210002X	Kit IN OUT 1/4 SY1 anti-corrosion
9210003X	Kit IN OUT 3/8 SY1 anti-corrosion
9210011X	Kit IN OUT 3/8 SY2 anti-corrosion
9210012X	Kit IN OUT 1/2 SY2 anti-corrosion
9210013X	Kit IN OUT 3/4 SY2 anti-corrosion
9210014X	Kit IN OUT 1 SY2 anti-corrosion

Max torque 0.4 Nm for SY1
Max torque 2.5 Nm for SY2

CONNECTING NIPPLE KIT

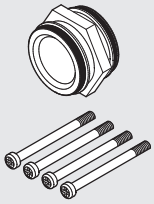

Code	Description
9210000	Connecting nipple kit SY1
9210010	Connecting nipple kit SY2
9210000X	Connecting nipple kit SY1 anti-corrosion
9210010X	Connecting nipple kit SY2 anti-corrosion

Max torque 0.4 Nm for SY1
Max torque 2.5 Nm for SY2

METAL WORK PNEUMATIC

90° CONNECTING ELEMENT KIT

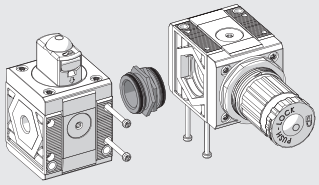

Code	Description
9210009	90° SY1 connection element kit
9210019	90° SY2 connection element kit
9210009X	90° anti-corrosion SY1 connection element kit
9210019X	90° anti-corrosion SY2 connection element kit

Max torque 0.4 Nm for SY1 Max torque 2.5 Nm for SY2

KIT CONNECTING REGTRONIC 1/4 (PAGE C6.12) AND GS REGULATOR (PAGE C6.2)

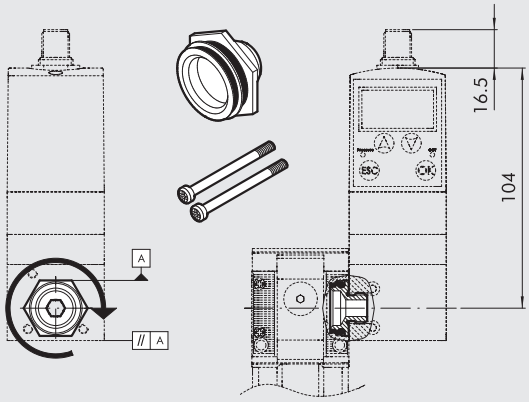

Code	Description
9210004	Adapter for regtronic 1/4 SY1

Max torque for screw, 0.4 Nm

Instructions:
1) Screw the connecting bushing onto the REGTRONIC 1/4 as far as it will go. Use sealant on the G1/4 thread to provide a further seal.
2) Unscrew the bushing slightly until two surfaces of the hexagon are parallel to the body of REGTRONIC 1/4 (see diagram).
3) Insert the bushing into the Syntesi® unit.
4) Tighten the two self-tapping screws in the Syntesi® unit to a torque of 0.4 Nm max.

SY1 - SY2 SIZE ADAPTER

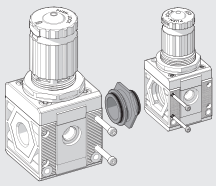

Code	Description
9210006	SY1 - SY2 size adapter
9210006X	SY1 - SY2 size adapter anti-corrosion

Max torque for screw, 0.4 Nm for SY1
Max torque for screw, 2.5 Nm for SY2

SY1 - SY2 KIT FOR CONNECTION TO FLUX 1 - 2

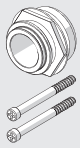

Code	Description
900099A002	Adapter FLUX 1 - SY1
900099A003	Adapter FLUX 2 - SY2

Max torque for screw, 0.4 Nm for SY1
Max torque for screw, 2.5 Nm for SY2
See page **C7**.18 for the assembly diagram.

SY1 - SY2 KIT FOR CONNECTION TO SERIE 70 SAFE AIR® VALVES

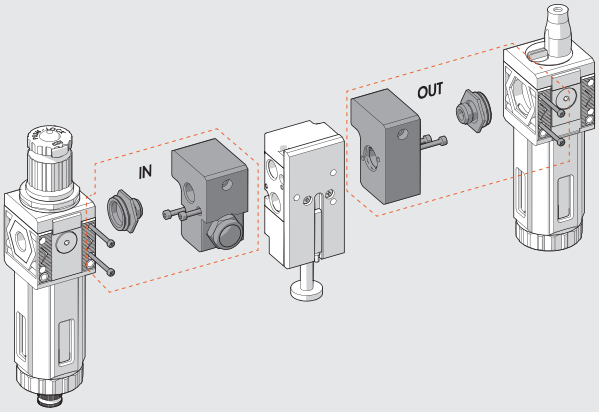

Code	Description
9210015	IN 1/4 SY1 block accessory
9210016	OUT 1/4 SY1 block accessory
9210022	IN 3/8 SY1 block accessory
9210023	OUT 3/8 SY1 block accessory
9210017	IN 3/8 SY2 block accessory
9210018	OUT 3/8 SY2 block accessory
9210020	IN 1/2 SY2 block accessory
9210021	OUT 1/2 SY2 block accessory

Max torque for screw, 0.4 Nm for SY1
Max torque for screw, 2.5 Nm for SY2

See page **B1**.155 for the assembly diagram.

BOWL DISASSEMBLY SPANNER

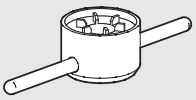

Code	Description
9170601	CS TF - TL BIT/SY1
9210050	CS TF - TL SY2

WALL-FIXING SCREW

Code	Description
9210030	M4 x 55 fixing screw SY1
9210031	M5 x 75 fixing screw SY2

Max torque 0.8 Nm for SY1
Max torque 2.0 Nm for SY2

PADLOCK

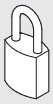

Code	Description
9062401	Padlock

SYNTESI® SPARE PARTS

AUTOMATIC DRAIN (RA)

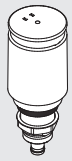

Code	Description
9000802	RA automatic drain spare part

AUTOMATIC DRAIN (SAC)

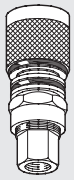

Code	Description
9000803	Spares SAC automatic drain

BOWL RMSA/RA/SAC

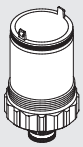

Code	Description
9210100	Bowl FIL FR DEP RMSA SY1
9210101	Bowl FIL FR RA SY1
9210102	Bowl FIL FR DEP SAC SY1
9210105	Bowl FIL FR DEP RMSA SY2
9210106	Bowl FIL FR RA SY2
9210107	Bowl FIL FR DEP SAC SY2

LUBRICATOR BOWL

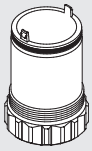

Code	Description
9210110	Bowl LUB SY1
9210115	Bowl LUB SY2

FILTERING ELEMENT

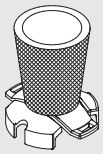

Code	Description
9210150	Filtering element 5µm (yellow) SY1
9210151	Filtering element 20µm (white) SY1
9210152	Filtering element 50µm (blue) SY1
9210155	Filtering element 5µm (yellow) SY2
9210156	Filtering element 20µm (white) SY2
9210157	Filtering element 50µm (blue) SY2

PURIFIER FILTERING ELEMENT

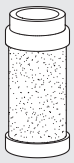

Code	Description
9210160	Cartridge 0.01µm DEP SY1
9210165	Cartridge 0.01µm DEP SY2
9210162	Cartridge 1µm DEP SY1
9210167	Cartridge 1µm DEP SY2

AC FILTERING ELEMENT (ACTIVE CARBON)

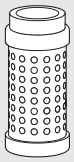

Code	Description
9210161	Cartridge AC SY1
9210166	Cartridge AC SY2

TRANSPARENT LUBRICATOR COVER

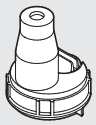

Code	Description
9210180	Transparent cover LUB SY1
9210185	Transparent cover LUB SY2

LUBRICATOR OIL-FILLING CAP

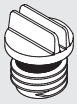

Code	Description
9210181	Oil-filling cap LUB SY1
9210186	Oil-filling cap LUB SY2

SPRINGS FOR REGULATORS AND FR

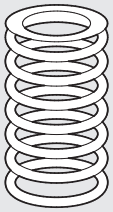

Code	Description
9210190	Spares MO 02 SY1
9210191	Spares MO 04 SY1/SY1 anti-corrosion
9210192	Spares MO 08 SY1
9210193	Spares MO 012 SY1
9210195	Spares MO 02 SY2
9210196	Spares MO 04 SY2
9210197	Spares MO 08 SY2
9210198	Spares MO 012 SY2
9210192X	Spares 08 SY1 anti-corrosion
9210193X	Spares 012 SY1 anti-corrosion
9210197X	Spares 08 SY2 anti-corrosion
9210198X	Spares 012 SY2 anti-corrosion

BELL FOR REG AND FR

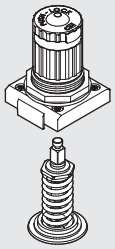

Code	Description
9210200	Bell 02 SY1
9210201	Bell 04 SY1
9210202	Bell 08 SY1
9210203	Bell 012 SY1
9210220	Bell 02 SY2
9210221	Bell 04 SY2
9210222	Bell 08 SY2
9210223	Bell 012 SY2
9210202X	Bell 08 SY1 anti-corrosion
9210203X	Bell 012 SY1 anti-corrosion
9210222X	Bell 08 SY2 anti-corrosion
9210223X	Bell 012 SY2 anti-corrosion

METAL WORK PNEUMATIC

POPPET FOR REG

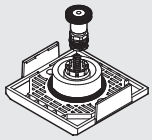

Code	Description
9210210	Poppet REG SY1
9210230	Poppet REG SY2
9210210X	Poppet REG SY1 anti-corrosion
9210230X	Poppet REG SY2 anti-corrosion

POPPET FOR FR

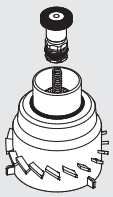

Code	Description
9210211	Poppet FR 5µm SY1
9210212	Poppet FR 20µm SY1
9210213	Poppet FR 50µm SY1
9210231	Poppet FR 5µm SY2
9210232	Poppet FR 20µm SY2
9210233	Poppet FR 50µm SY2

CNOMO CONTROL FOR V3V AND APR SY2

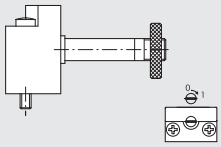

Code	Description
9453922	Elpn Cnomo control kit, manual bistable

NOTES

NOTES

NOTES

METAL WORK PNEUMATIC

NOTES

NOTES

METAL WORK PNEUMATIC

NOTES

NOTES

SUMMARY bit

METAL WORK PNEUMATIC

bit STANDARD

- GENERAL TECHNICAL DATA bit — C2.2
- bit FILTER — C2.4
- bit DEPURATOR — C2.6
- bit MICRO-REGULATOR — C2.8
- bit PADLOCKABLE MICROREGULATOR — C2.10
- bit FILTER-REGULATOR — C2.11
- bit LUBRICATOR — C2.13
- bit TAKE-OFF — C2.16
- FIL + REG + LUB bit — C2.17
- FR + LUB bit — C2.19
- FIL + DEP bit — C2.21
- FIL + LUB bit — C2.22

bit SERIES F FOR WATER

- GENERAL TECHNICAL DATA bit SERIES F FOR WATER — C2.23
- bit SERIES F FILTER FOR WATER — C2.24
- bit SERIES F REGULATOR FOR WATER — C2.26
- bit SERIES F FILTER-REGULATOR FOR WATER — C2.29

ACCESSORIES AND SPARE PARTS

- bit ACCESSORIES — C2.32
- bit SPARE PARTS — C2.33

GENERAL TECHNICAL DATA bit

The units in the **bit** range feature:
- reduced dimensions
- negligible load loss
- long life
- excellent quality-to-price ratio

Thanks to its technical features the **bit** air treatment range is particularly suitable for de-centralized use near the final actuators.

TECHNICAL DATA		BIT 1/8"	BIT 1/4"
Threaded port		1/8"	1/4"
Degree of filtration	µm	5 (yellow) 20 (white) 50 (blue)	
Degree of purification		99.97% a 0.01 µm	
Setting range	bar	0 to 2 - 0 to 4 - 0 to 8 - 0 to 12	
Max. inlet pressure	MPa	1.3	
	bar	13	
	psi	188	
Flow rate at 6.3 bar (0.63 MPa to 91 psi) ΔP 0.5 bar (0.05 MPa to 7 psi)	Nl/min	350	
	scfm	12	
Max temperature at 1 MPa; 10 bar; 145 psi	°C	– 10° to + 50°	
	°F	14° to 122°	
Elements		Filter – Regulator – Lubricator – Filter-regulator – Depurator	
		Units: FRL, FR + L, F + L, F + D	
Mounting		By means of the bracket provided	
Fluid		Compressed air	
Compatibility with oils		See **chapter Z1**	

ASSEMBLY

Use ASSEMBLY PLATES (code 9170201) to assemble the **bit** elements correctly.
Assembly procedure:
- Fit the plates right into the slots under the body of the **bit** element
- Check that there O-rings round the threaded outlet
- Assemble the elements, making sure that the flow run in the direction of the arrows marked on the body.

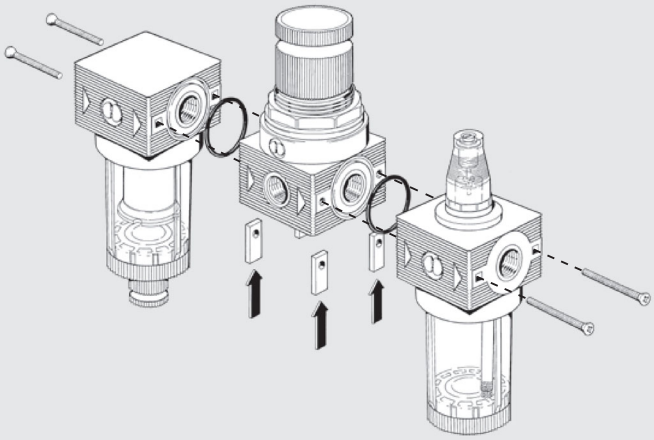

METAL WORK PNEUMATIC

WALL MOUNTING

The wall fixing of a **bit** unit can be made through:
- Fixing bracket R/FR code 9200701 (A)
- Wall fixing plates code 9170301 (B)

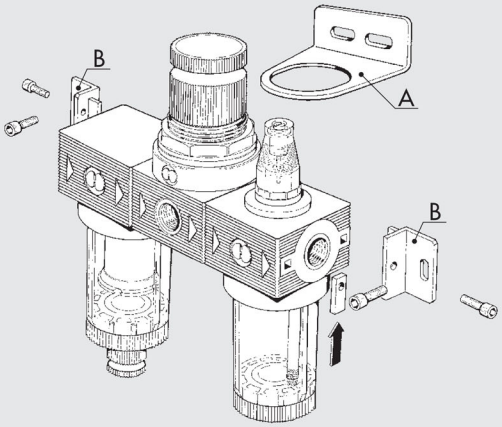

GENERAL RULES - USE AND MAINTENANCE

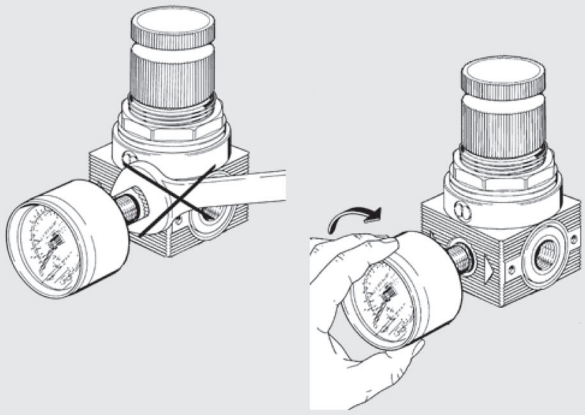

MOUNTING THE GAUGE

The gauge must be mounted by hand without using a spanner.
Use fluid sealants to provide a good seal.
N.B. Do not use Teflon.

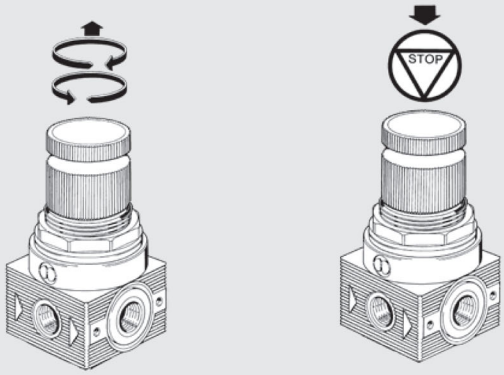

SETTING THE PRESSURE

The air pressure must always be set upwards. The knob can be locked so that the set pressure cannot be altered.

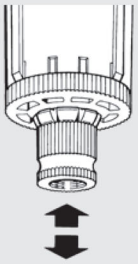

With the knob in the centre position, the drain is semi-automatic.
The drain operates when the bowl is not pressurized and closes when it is.

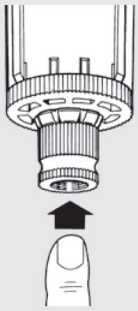

Press the button to drain condensate when the bowl is pressurized.

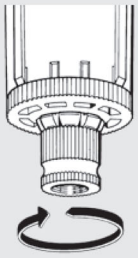

Turn the knob anticlockwise to close the valve with bowl pressurized or not pressurized.

To clean or replace the filter element unscrew the screen of the centrifuge assembly.
Use a no. 3 compass spanner to unscrew the bowl.

bit FILTER

The units in the **bit** range feature:
- reduced dimensions
- negligible load loss
- long life
- excellent quality-to-price ratio

Thanks to its technical features the **bit** air treatment range is particularly suitable for de-centralized use near the final actuators.

TECHNICAL DATA		BIT 1/8"	BIT 1/4"
Threaded port		1/8"	1/4"
Degree of filtration	µm	5 (yellow) 20 (white) 50 (blue)	
Max. inlet pressure	MPa	1.3	
	bar	13	
	psi	188	
Flow rate at 6.3 bar (0.6 MPa to 91 psi) ΔP 0.5 bar (0.05 MPa to 7 psi)	Nl/min	860	
	scfm	30.5	
Flow rate at 6.3 bar (0.6 MPa to 91 psi) ΔP 1 bar (0.1 MPa to 14 psi)	Nl/min	1200	
	scfm	42.5	
Max temperature at 1 MPa; 10 bar; 145 psi	°C	50	
	°F	122	
Weight	g	40	
Wall fixing screws		M4 by means of the bracket provided	
Bowl capacity	cm^3	16	
Mounting position		Vertical	
Condensate drain		RMSA: drain with manual condensate discharge and automatic discharge at zero pressure	
		SAC: automatic drain with condensate discharge .	
		Operates by pressure drop – requires variable air take-offs.	
Fluid		Compressed air	

COMPONENTS

① Technopolymer body with OT58 threaded element
② Clear technopolymer bowl
③ Technopolymer baffle plug
④ Technopolymer centrifuge
⑤ Condensate drain (RMSA)
⑥ HDPE sintered filter cartridge
⑦ NBR gaskets

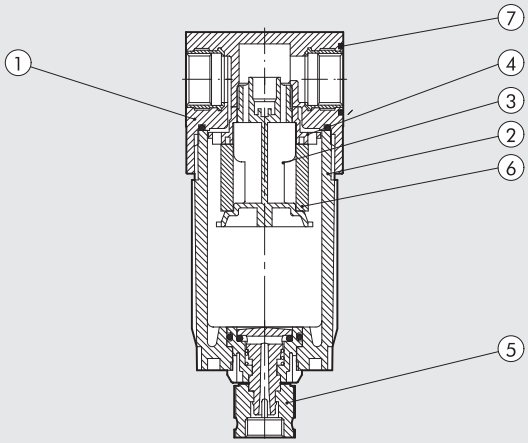

METAL WORK PNEUMATIC

FLOW CHARTS

FIL

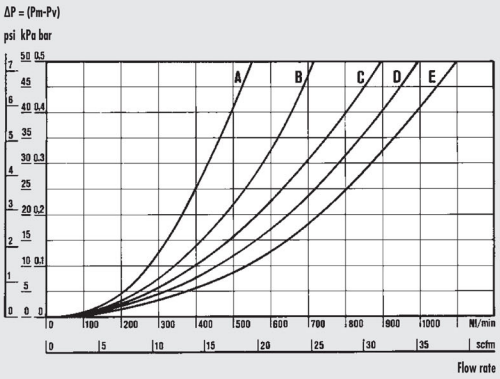

Chart referring to a filter with 1/4 ports

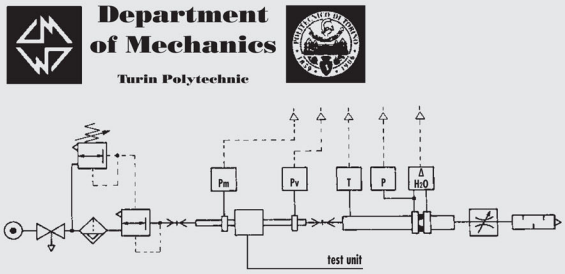

• Flow tests carried out at the Department of Mechanics, Turin Polytechnic, using the computerized test bench following CETOP RP50R recommendations (ISO DIS 6358-2-approved) with ISO 5167 diaphragm gauge.

(A) = 2 bar - 0.2 MPa - 29 psi
(B) = 4 bar - 0.4 MPa - 58 psi
(C) = 6 bar - 0.6 MPa - 87 psi
(D) = 8 bar - 0.8 MPa - 116 psi
(E) = 10 bar - 1 MPa - 145 psi

DIMENSIONS

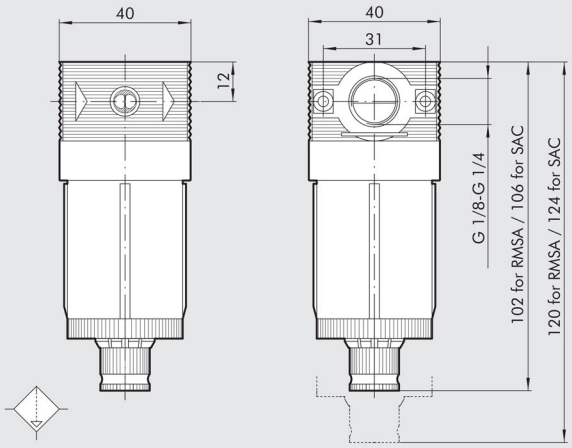

ORDERING CODES

Code	Description
5101001	FIL BIT 1/8 5 RMSA
5101004	FIL BIT 1/8 5 SAC
5101002	FIL BIT 1/8 20 RMSA
5101005	FIL BIT 1/8 20 SAC
5101003	FIL BIT 1/8 50 RMSA
5101006	FIL BIT 1/8 50 SAC
5201001	FIL BIT 1/4 5 RMSA
5201004	FIL BIT 1/4 5 SAC
5201002	FIL BIT 1/4 20 RMSA
5201005	FIL BIT 1/4 20 SAC
5201003	FIL BIT 1/4 50 RMSA
5201006	FIL BIT 1/4 50 SAC

SYNOPTIC, SIZES AND VERSIONS

FIL	BIT	1/8	5	RMSA
ELEMENT	SIZE	THREADED PORT	DEGREE OF FILTRATION	CONDENSATE DRAIN
FIL	BIT	1/8 1/4	5 = 5 µm 20 = 20 µm 50 = 50 µm	RMSA SAC

RMSA: drain with manual condensate discharge and automatic discharge at zero pressure.
SAC: automatic drain with condensate discharge.
Operates by pressure drop – requires variable air take-offs.

bit DEPURATOR

Coalescing mini-depurator
- Space saving
- Minimum load loss as the flow rate varies
- All-round condensate level viewing

TECHNICAL DATA		DEP BIT 1/8"	DEP BIT 1/4"
Threaded port		1/8"	1/4"
Degree of purification		99.97% 0.01 µm	
Max. inlet pressure	MPa	1.3	
	bar	13	
	psi	188	
Suggested flow at 6 bar	Nl/min	200	
	scfm	7	
Maximum suggested flow rate		See next page	
Max temperature at 1 MPa; 10 bar; 145 psi	°C	50	
	°F	122	
Weight	g	65	
Wall fixing screws		M4 by means of the bracket provided	
Bowl capacity	cm^3	16	
Mounting position		Vertical	
Condensate drain		RMSA: drain with manual condensate discharge and automatic discharge at zero pressure.	
Fluid		Filtered 5 µm compressed air	
Notes		A It is advisable to mount a 5 m filter upstream the depurator acting as a rough filter.	

USE AND MAINTENANCE

When replacing the coalescing cartridge, unscrew the bowl and then unscrew the screen of the cartridge assembly.
Then replace the cartridge. Use a no. 3 compass spanner to unscrew the bowl.

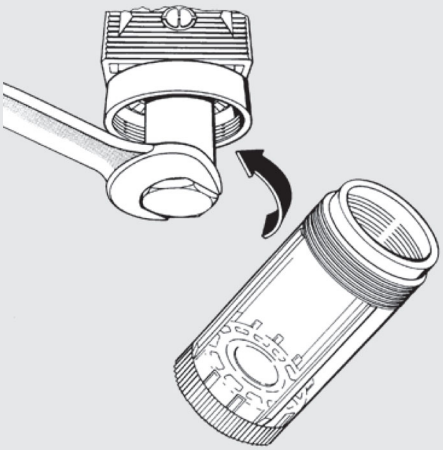

METAL WORK PNEUMATIC

FLOW CHARTS

DEP

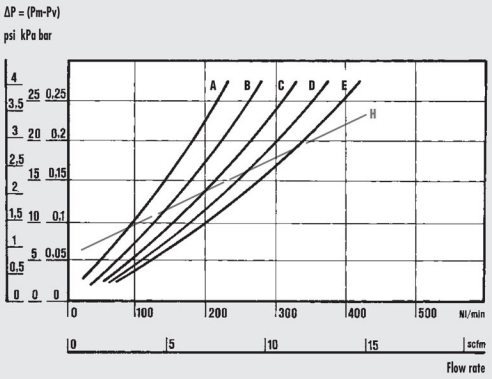

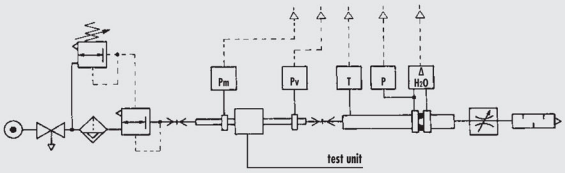

• Flow tests carried out at the Department of Mechanics, Turin Polytechnic, using the computerized test bench following CETOP RP50R recommendations (ISO DIS 6358-2-approved) with ISO 5167 diaphragm gauge.

(A) = 2 bar - 0.2 MPa - 29 psi
(B) = 4 bar - 0.4 MPa - 58 psi
(C) = 6 bar - 0.6 MPa - 87 psi
(D) = 8 bar - 0.8 MPa - 116 psi
(E) = 10 bar - 1 MPa - 145 psi
(H) = maximum flow rate recommended for optimal operation

DIMENSIONS

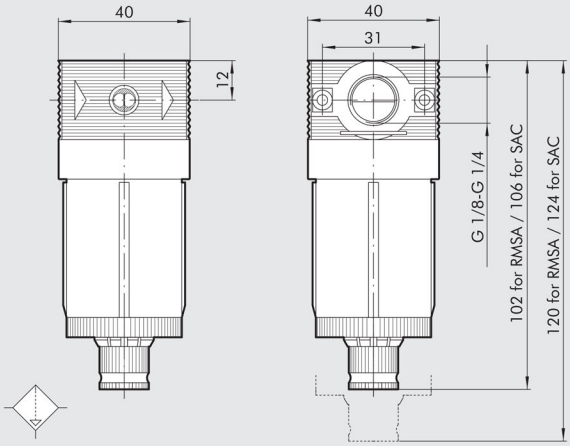

ORDERING CODES

Code	Description
5112001	DEP BIT 1/8 RMSA
5212001	DEP BIT 1/4 RMSA

SYNOPTIC, SIZES AND VERSIONS

DEP	BIT	1/8	RMSA
ELEMENT	SIZE	THREADED PORT	CONDENSATE DRAIN
DEP	BIT	1/8 1/4	RMSA

RMSA: drain with manual condensate discharge and automatic discharge at zero pressure.

bit MICRO-REGULATOR

Micro-regulator with rolling diaphragm.
- Preset pressure stability as the upstream pressure varies.
- High flow rates with reduced pressure drops
- Quick overpressure exhaust

Versions available
bit FC: controlled relief to allow greater accuracy in regulation by means of slight continuous air relief.
bit for water: used to regulate the pressure in water circuits; without blowoff valve
bit SR: for use when the downstream circuit needs to be relieved quickly as the upstream pressure drops. Mount the SR regulator between the power supply valve and the point of use.

TECHNICAL DATA		MR BIT 1/8"	MR BIT 1/4"
Threaded port		1/8"	1/4"
Setting range		0 to 2 - 0 to 4 - 0 to 8 - 0 to 12	
Max. inlet pressure	MPa	1.3	
	bar	13	
	psi	188	
Flow rate at 6.3 bar (0.63 MPa to 91 psi) ΔP 0.5 bar (0.05 MPa to 7 psi)	Nl/min	340	
	scfm	12	
Flow rate at 6.3 bar (0.63 MPa to 91 psi) ΔP 1 bar (0.1 MPa to 14 psi)	Nl/min	600	
	scfm	21	
Max temperature at 1 MPa; 10 bar; 145 psi	°C	50	
	°F	122	
Weight	g	80	
Wall fixing screws		M4 by means of the bracket provided	
Gauge port		G 1/8"	
Mounting position		In any position	
Fluid		Filtered, lubricated or unlubricated compressed air. Lubrication, if used, must be continuous.	
Notes		The regulator pressure must always be set upwards.	
		For increased sensitivity, use a pressure regulator with a rated pressure as close as possible to the required value.	

COMPONENTS

① Technopolymer body with OT58 threaded element
② Technopolymer bell
③ Technopolymer fixing ring nut
④ Technopolymer knob
⑤ Rolling diaphragm
⑥ Technopolymer plug
⑦ Technopolymer anti-vibration screen
⑧ NBR relieving gasket
⑨ OT58 brass adjusting screws
⑩ OT58 valve with NBR vulcanized gasket
⑪ OT58 brass nut
⑫ Steel adjusting spring
⑬ Stainless steel valve compression spring
⑭ NBR gaskets

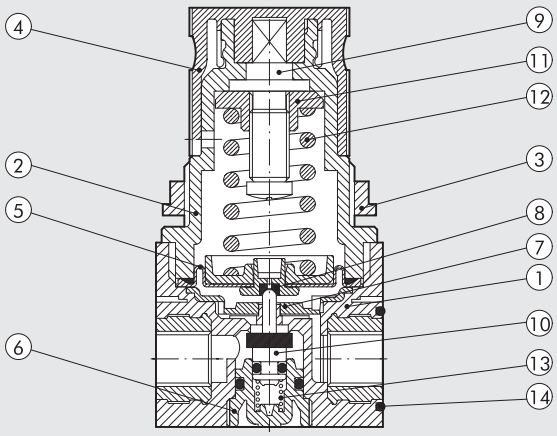

METAL WORK PNEUMATIC

FLOW CHARTS

MR

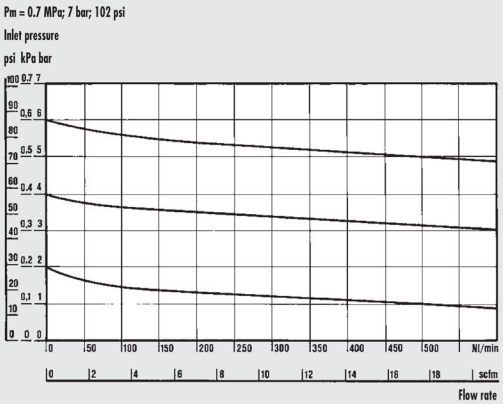

Department of Mechanics
Turin Polytechnic

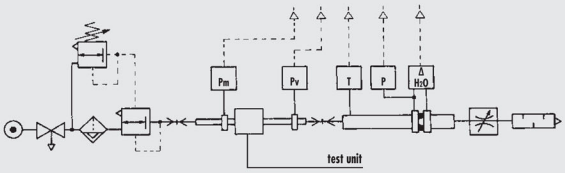

• Flow tests carried out at the Department of Mechanics, Turin Polytechnic, using the computerized test bench following CETOP RP50R recommendations (ISO DIS 6358-2-approved) with ISO 5167 diaphragm gauge.

DIMENSIONS

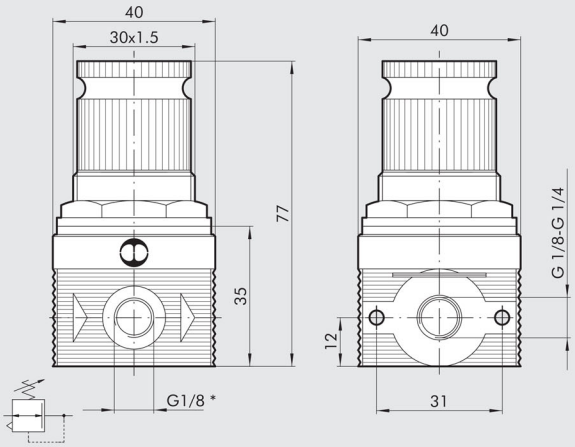

* Pressure gauge port

SYNOPTIC, SIZES AND VERSIONS

MR	BIT	FC	1/8	02
ELEMENT	SIZE	VERSION	THREADED PORT	CONDENSATE DRAIN
MR	BIT	FC = Controlled relief SR = Quickly relieved = Standard	1/8" 1/4"	02 = 0 to 2 bar 04 = 0 to 4 bar 08 = 0 to 8 bar 012 = 0 to 12 bar
MRA		Without relief (for WATER)		

ORDERING CODES

Code	Description
MICROREGULATOR (MR)	
5107004	MR BIT 1/8 012
5107001	MR BIT 1/8 02
5107002	MR BIT 1/8 04
5107003	MR BIT 1/8 08
5207004	MR BIT 1/4 012
5207001	MR BIT 1/4 02
5207002	MR BIT 1/4 04
5207003	MR BIT 1/4 08
MICROREGULATOR WITH CONTROLLED RELIEF	
5111001	MR BIT FC 1/8 02
5111002	MR BIT FC 1/8 04
5211001	MR BIT FC 1/4 02
5211002	MR BIT FC 1/4 04
MICROREGULATOR WITH QUICK RELIEF	
5102001	MR BIT SR 1/8 02
5102002	MR BIT SR 1/8 04
5102003	MR BIT SR 1/8 08
5102004	MR BIT SR 1/8 012
5202001	MR BIT SR 1/4 02
5202002	MR BIT SR 1/4 04
5202003	MR BIT SR 1/4 08
5202004	MR BIT SR 1/4 012
WATER MICROREGULATOR	
5108001	MRA BIT 1/8 02
5108002	MRA BIT 1/8 04
5108003	MRA BIT 1/8 08
5108004	MRA BIT 1/8 012
5208001	MRA BIT 1/4 02
5208002	MRA BIT 1/4 04
5208003	MRA BIT 1/4 08
5208004	MRA BIT 1/4 012

bit PADLOCKABLE MICROREGULATOR

The padlockable microregulator has a pin with a hole in it that projects from the top of the knob. When the knob is in the push-lock position, the padlock can be inserted in the hole, preventing the knob from being operated. A padlock and two keys are supplied with the regulator.

Refer to the bit microregulator for technical data and flow curves.

COMPONENTS

① Technopolymer body with OT58 threaded element
② Technopolymer bell
③ Technopolymer fixing ring nut
④ Technopolymer knob
⑤ Rolling diaphragm
⑥ Technopolymer plug
⑦ Technopolymer anti-vibration screen
⑧ NBR relieving gasket
⑨ Nickel-plated brass OT58 adjusting screws
⑩ OT58 valve with NBR vulcanized gasket
⑪ OT58 brass nut
⑫ Steel adjusting spring
⑬ Stainless steel valve compression spring
⑭ NBR gaskets
⑮ Padlock

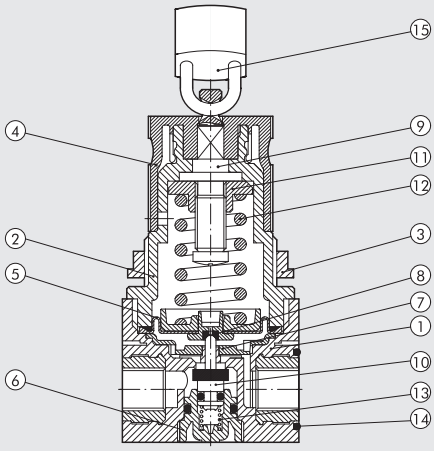

DIMENSIONS

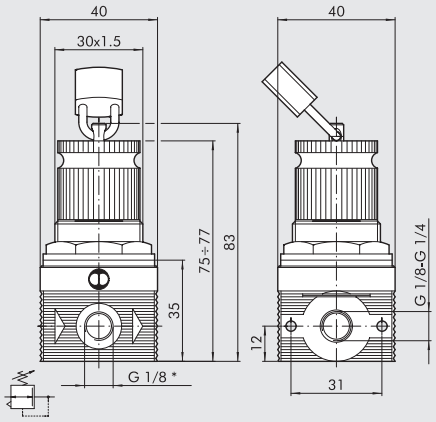

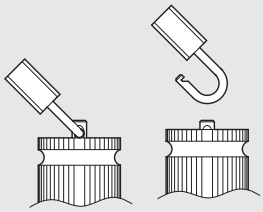

* Pressure gauge port

ORDERING CODES

Code	Description
5110001	MR BIT KEY 1/8 02
5110002	MR BIT KEY 1/8 04
5110003	MR BIT KEY 1/8 08
5110004	MR BIT KEY 1/8 012
5210001	MR BIT KEY 1/4 02
5210002	MR BIT KEY 1/4 04
5210003	MR BIT KEY 1/4 08
5210004	MR BIT KEY 1/4 012

SYNOPTIC, SIZES AND VERSIONS

MR	BIT	KEY	1/8	02
ELEMENT	SIZE	TYPE	THREADED PORT	SETTING RANGE
MR	BIT	Padlockable	1/8 1/4	02 = 0 to 2 bar 04 = 0 to 4 bar 08 = 0 to 8 bar 012 = 0 to 12 bar

bit FILTER-REGULATOR

METAL WORK PNEUMATIC

Filter regulator with rolling diaphragm.
- High flow rate with reduced pressure drop
- Excellent degree of condensate separation
- Semi-automatic or automatic drain
- All-round condensate level viewing

The degree of filtration is shown by the colour of the cartridge:
yellow = 5 µm, white = 20 µm, blue = 50 µm.

TECHNICAL DATA		FR BIT 1/8"	FR BIT 1/4"
Threaded port		1/8"	1/4"
Setting range		0 to 2 - 0 to 4 - 0 to 8 - 0 to 12	
Degree of filtration	µm	5 (yellow) - 20 (white) - 50 (blue)	
Max. inlet pressure	MPa	1.3	
	bar	13	
	psi	188	
Flow rate at 6.3 bar (0.63 MPa to 91 psi) ΔP 0.5 bar (0.05 MPa to 7 psi)	Nl/min	290	
	scfm	10	
Flow rate at 6.3 bar (0.63 MPa to 91 psi) ΔP 1 bar (0.1 MPa to 14 psi)	Nl/min	600	
	scfm	21	
Max temperature at 1 MPa; 10 bar; 145 psi	°C	50	
	°F	122	
Weight	g	110	
Wall fixing screws		M4 by means of the bracket provided	
Bowl capacity	cm^3	16	
Mounting position		Vertical	
Gauge port		G 1/8"	
Condensate drain		RMSA: drain with manual condensate discharge and automatic discharge at zero pressure SAC: automatic drain with condensate discharge . **Operates by pressure drop – requires variable air take-offs**.	
Fluid		Compressed air	
Notes		The regulator pressure must always be set upwards. For increased sensitivity, use a pressure regulator with a rated pressure as close as possible to the required value.	

COMPONENTS

① Technopolymer body with OT58 threaded element
② Clear technopolymer bowl
③ Technopolymer knob
④ Technopolymer bell
⑤ Technopolymer fixing ring nut
⑥ OT58 brass nut
⑦ OT58 brass adjusting screw
⑧ Steel adjusting spring
⑨ NBR relieving gasket
⑩ Rolling diaphragm
⑪ OT58 valve with NBR vulcanized gasket
⑫ Stainless steel valve compression spring
⑬ Technopolymer centrifuge
⑭ Technopolymer baffle plug
⑮ HDPE sintered filter cartridge
⑯ Condensate drain (RMSA)
⑰ NBR gaskets

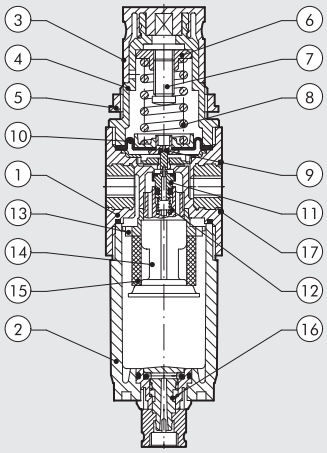

FLOW CHARTS

FR

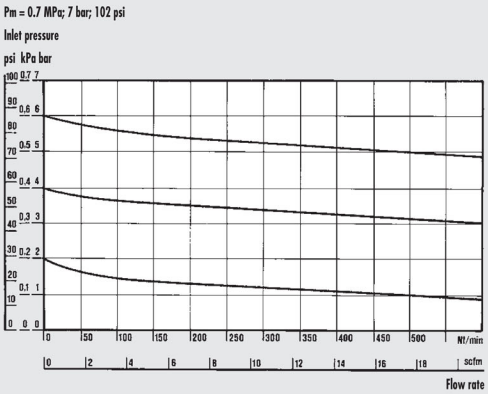

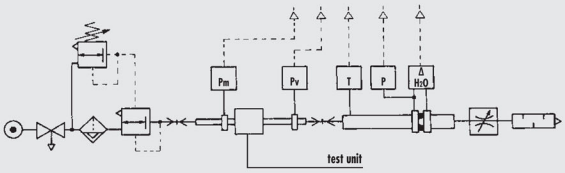

• Flow tests carried out at the Department of Mechanics, Turin Polytechnic, using the computerized test bench following CETOP RP50R recommendations (ISO DIS 6358-2-approved) with ISO 5167 diaphragm gauge.

DIMENSIONS

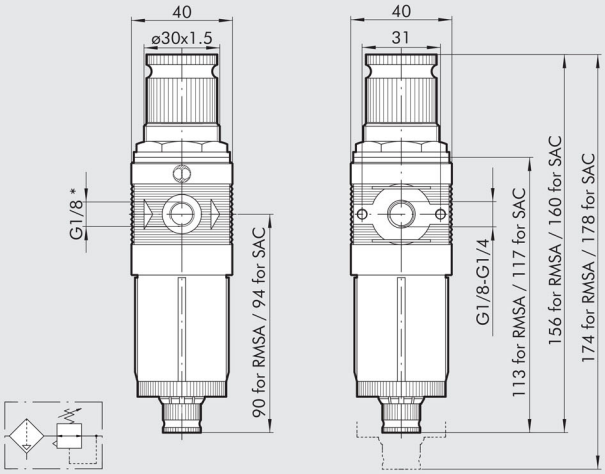

* Pressure gauge port

SYNOPTIC, SIZES AND VERSIONS

FR	BIT	1/8	5	02	RMSA
ELEMENT	SIZE	THREADED PORT	DEGREE OF FILTRATION	SETTING RANGE	CONDENSATE DRAIN
FR	BIT	1/8 1/4	5 = 5 µm 20 = 20 µm 50 = 50 µm	02 = 0 to 2 bar 04 = 0 to 4 bar 08 = 0 to 8 bar 012 = 0 to 12 bar	RMSA SAC

RMSA: drain with manual condensate discharge and automatic discharge at zero pressure
SAC: automatic drain with condensate discharge .
Operates by pressure drop – requires variable air take-offs.

ORDERING CODES

Code	Description
5105001	FR BIT 1/8 5 02 RMSA
5105013	FR BIT 1/8 5 02 SAC
5105002	FR BIT 1/8 20 02 RMSA
5105014	FR BIT 1/8 20 02 SAC
5105003	FR BIT 1/8 50 02 RMSA
5105015	FR BIT 1/8 50 02 SAC
5105004	FR BIT 1/8 5 04 RMSA
5105016	FR BIT 1/8 5 04 SAC
5105005	FR BIT 1/8 20 04 RMSA
5105017	FR BIT 1/8 20 04 SAC
5105006	FR BIT 1/8 50 04 RMSA
5105018	FR BIT 1/8 50 04 SAC
5105007	FR BIT 1/8 5 08 RMSA
5105019	FR BIT 1/8 5 08 SAC
5105008	FR BIT 1/8 20 08 RMSA
5105020	FR BIT 1/8 20 08 SAC
5105009	FR BIT 1/8 50 08 RMSA
5105021	FR BIT 1/8 50 08 SAC
5105010	FR BIT 1/8 5 012 RMSA
5105022	FR BIT 1/8 5 012 SAC
5105011	FR BIT 1/8 20 012 RMSA
5105023	FR BIT 1/8 20 012 SAC
5105012	FR BIT 1/8 50 012 RMSA
5105024	FR BIT 1/8 50 012 SAC
5205001	FR BIT 1/4 5 02 RMSA
5205013	FR BIT 1/4 5 02 SAC
5205002	FR BIT 1/4 20 02 RMSA
5205014	FR BIT 1/4 20 02 SAC
5205003	FR BIT 1/4 50 02 RMSA
5205015	FR BIT 1/4 50 02 SAC
5205004	FR BIT 1/4 5 04 RMSA
5205016	FR BIT 1/4 5 04 SAC
5205005	FR BIT 1/4 20 04 RMSA
5205017	FR BIT 1/4 20 04 SAC
5205006	FR BIT 1/4 50 04 RMSA
5205018	FR BIT 1/4 50 04 SAC
5205007	FR BIT 1/4 5 08 RMSA
5205019	FR BIT 1/4 5 08 SAC
5205008	FR BIT 1/4 20 08 RMSA
5205020	FR BIT 1/4 20 08 SAC
5205009	FR BIT 1/4 50 08 RMSA
5205021	FR BIT 1/4 50 08 SAC
5205010	FR BIT 1/4 5 012 RMSA
5205022	FR BIT 1/4 5 012 SAC
5205011	FR BIT 1/4 20 012 RMSA
5205023	FR BIT 1/4 20 012 SAC
5205012	FR BIT 1/4 50 012 RMSA
5205024	FR BIT 1/4 50 012 SAC

bit LUBRICATOR

METAL WORK PNEUMATIC

Mini-lubricator with high lubrication stability.
- Quantity of lubricant proportioned to air flow
- Activates at low flow rates
- Micrometric regulation of lubricant flow
- All-round oil level viewing

TECHNICAL DATA		LUB BIT 1/8"	LUB BIT 1/4"
Threaded port		1/8"	1/4"
Type of lubrication		Oil mist	
Bowl capacity	cm^3	26.5	
Lubricator version		Manual filling with the bowl disassembled	
Max. inlet pressure	MPa	1.3	
	bar	13	
	psi	188	
Flow rate at 6.3 bar (0.63 MPa to 91 psi) ΔP 0.5 bar (0.05 MPa to 7 psi)	Nl/min	400	
	scfm	14	
Flow rate at 6.3 bar (0.63 MPa to 91 psi) ΔP 1 bar (0.1 MPa to 14 psi)	Nl/min	710	
	scfm	25	
Max temperature at 1 MPa; 10 bar; 145 psi	°C	50	
	°F	122	
Weight	g	40	
Wall fixing screws		M4 by means of the bracket provided	
Mounting position		Vertical	
Fluid		Filtered compressed air	

COMPONENTS

① Technopolymer body with OT58 threaded elements
② Clear technopolymer bowl
③ Rilsan oil suction pipe
④ Filter
⑤ Technopolymer plug
⑥ Oil flow adjustment regulation needle made of OT58 brass
⑦ Clear technopolymer cover
⑧ NBR Venturi diaphragm
⑨ NBR gaskets

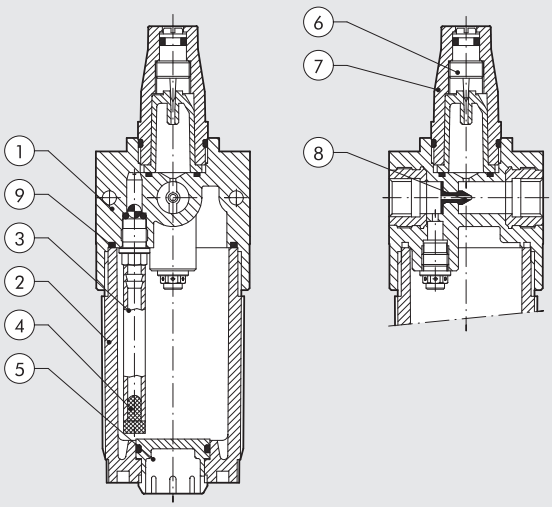

GENERAL RULES - USE AND MAINTENANCE

Use a no. 3 compass spanner to unscrew the bowl.

- Fit the lubricator as close as possible to the point of use
- Fill the bowl with oil before pressurizing the system
- Do not use cleaning oil, brake fluid or solvents in general
- For correct lubrication, set the drip rate to approximately 1 drop every 300-600 Nl via the adjusting screw.
- Recommended lubricants:
  ISO and UNI FD22
  E.g. Energol HLP 22 (BP) – Spinesso 22 (Esso) - Mobil DTE 22 (Mobil) – Tellus Oil 22 (Shell).

REGULATING LUBRICATION

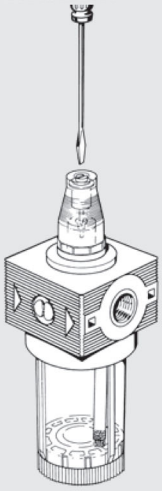

FILLING THE BOWL WITH OIL

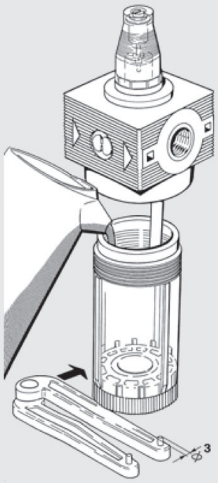

FLOW CHARTS

LUB

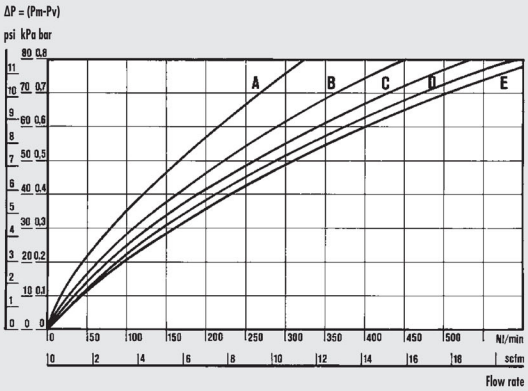

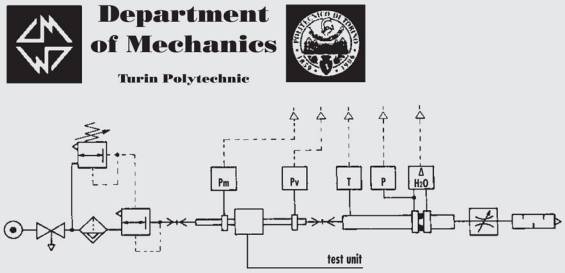

- Flow tests carried out at the Department of Mechanics, Turin Polytechnic, using the computerized test bench following CETOP RP50R recommendations (ISO DIS 6358-2-approved) with ISO 5167 diaphragm gauge.

(A) = 2 bar - 0.2 MPa - 29 psi
(B) = 4 bar - 0.4 MPa - 58 psi
(C) = 6 bar - 0.6 MPa - 87 psi
(D) = 8 bar - 0.8 MPa - 116 psi
(E) = 10 bar - 1 MPa - 145 psi

LUB 1/8-1/4

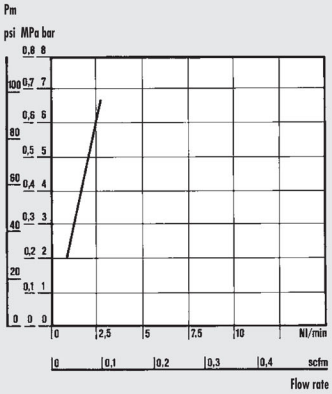

MINIMUM OPERATION FLOW CHARTS
Minimum flow tests were performed in compliance with ISO/DP 6301/2.

METAL WORK PNEUMATIC

DIMENSIONS

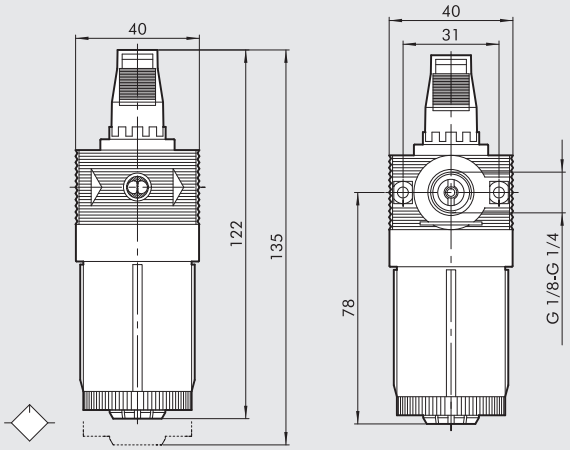

ORDERING CODES

Code	Description
5103001	LUB BIT 1/8
5203001	LUB BIT 1/4

NOTES

bit TAKE-OFF

- The air take-off takes air from the FRL unit irrespective of the assembly position.
- It is necessary when air needs to be taken from the FRL unit at any stage of the treatment (normal, filtered, regulated, lubricated, etc.).

TECHNICAL DATA

		PA
Maximum operating pressure	MPa	1.3
	bar	13
	psi	188
Maximum working temperature at 1 MPa; 10 bar; 145 psi	°C	50
	°F	

CONNECTION DIAGRAMS AND APPLICATION

Mounting the air take-off at the inlet: only use two screws and the O-rings supplied in the PA kit.

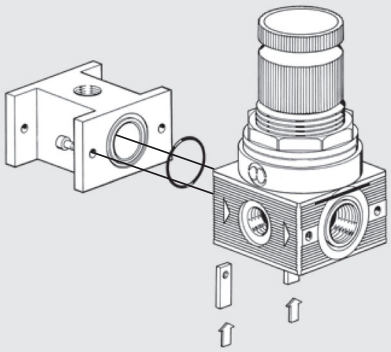

Mounting the air take-off at the outlet: only use two screws and the O-rings supplied in the PA kit. Seal is provided by the contact between O-rings.

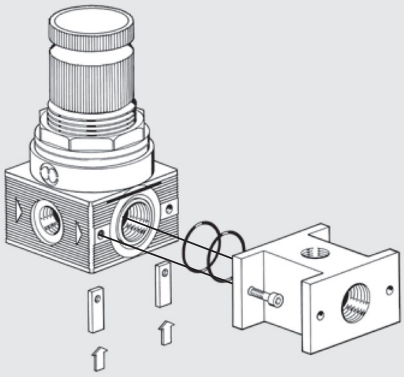

DIMENSIONS

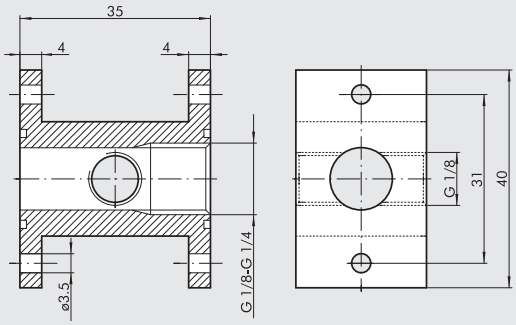

ORDERING CODES

Code	Description
9100401	PA 1/8 - 1/4 BIT

FIL + REG + LUB bit

METAL WORK PNEUMATIC

Complete mini-FRL unit with rolling diaphragm.
- High flow rates with reduced pressure drop
- Excellent degree of condensate separation
- Quantity of lubricant proportioned to air flow
- Activates at low flow rates

TECHNICAL DATA		F + R + L BIT 1/8"	F + R + L BIT 1/4"
Threaded port		1/8"	1/4"
Setting range		0 to 2 - 0 to 4 - 0 to 8 - 0 to 12	
Degree of filtration	µm	5 (yellow) 20 (white) 50 (blue)	
Type of lubrication		Oil mist	
Max. inlet pressure	MPa	1.3	
	bar	13	
	psi	188	
Flow rate at 6.3 bar (0.63 MPa to 91 psi) ΔP 0.5 bar (0.05 MPa to 7 psi)	Nl/min	150	
	scfm	5.3	
Flow rate at 6.3 bar (0.63 MPa to 91 psi) ΔP 1 bar (0.1 MPa to 14 psi)	Nl/min	280	
	scfm	10	
Max temperature at 1 MPa; 10 bar; 145 psi	°C	50	
	°F	122	
Weight	g	160	
Wall fixing screws		M4 by means of the bracket provided	
Gauge port		G1/8"	
Mounting position		Vertical	
Condensate drain		RMSA: drain with manual condensate discharge and automatic discharge at zero pressure SAC: automatic drain with condensate discharge. **Operates by pressure drop – requires variable air take-offs.**	
Fluid		Compressed air	
Notes		See chapters regarding individual elements.	

DIMENSIONS

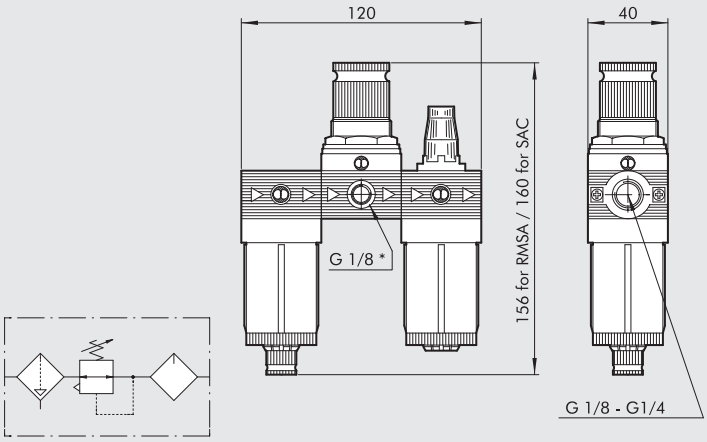

* Pressure gauge port

SYNOPTIC, SIZES AND VERSIONS

FRL	BIT	1/8	5	02	RMSA
ELEMENT	SIZE	THREADED PORT	DEGREE OF FILTRATION	SETTING RANGE	CONDENSATE DRAIN
FRL	BIT	1/8 1/4	5 = 5 µm 20 = 20 µm 50 = 50 µm	02 = 0 to 2 bar 04 = 0 to 4 bar 08 = 0 to 8 bar 012 = 0 to 12 bar	RMSA SAC

RMSA: drain with manual condensate discharge and automatic discharge at zero pressure
SAC: automatic drain with condensate discharge.
Operates by pressure drop – requires variable air take-offs.

ORDERING CODES

Code	Description
5104008	FRL BIT 1/8 20 08 RMSA
5104011	FRL BIT 1/8 20 012 RMSA
5204008	FRL BIT 1/4 20 08 RMSA
5204011	FRL BIT 1/4 20 012 RMSA

The following versions are available on request:
- with 5 µm or 50 µm degree of filtration
- with 0-2 bar or 0-4 bar setting range
- with SAC condensate discharge

NOTES

FR + LUB bit

Compact FR + L unit with rolling diaphragm.
- High flow rates with reduced pressure drop
- Excellent degree of condensate separation
- Quantity of lubricant proportioned to air flow
- Activates at low flow rates

TECHNICAL DATA		FR + L BIT 1/8″	FR + L BIT 1/4″
Threaded port		1/8″	1/4″
Setting range		0 to 2 - 0 to 4 - 0 to 8 - 0 to 12	
Degree of filtration	µm	5 (yellow) 20 (white) 50 (blue)	
Type of lubrication		Oil mist	
Max. inlet pressure	MPa	1.3	
	bar	13	
	psi	188	
Flow rate at 6.3 bar (0.63 MPa to 91 psi) ΔP 0.5 bar (0.05 MPa to 7 psi)	Nl/min	140	
	scfm	5	
Flow rate at 6.3 bar (0.63 MPa to 91 psi) ΔP 1 bar (0.1 MPa to 14 psi)	Nl/min	260	
	scfm	9.2	
Max temperature at 1 MPa; 10 bar; 145 psi	°C	50	
	°F	122	
Weight	g	170	
Wall fixing screws		M4 by means of the bracket provided	
Gauge port		G1/8″	
Mounting position		Vertical	
Condensate drain		RMSA: drain with manual condensate discharge and automatic discharge at zero pressure	
		SAC: automatic drain with condensate discharge.	
		Operates by pressure drop – requires variable air take-offs.	
Fluid		Compressed air	
Notes		See chapters regarding individual elements.	

DIMENSIONS

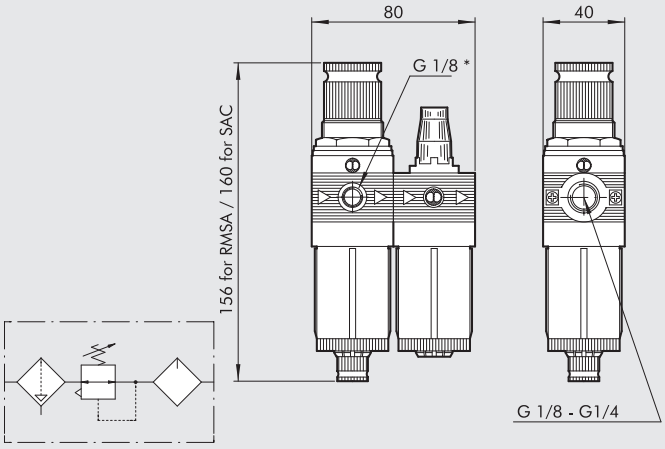

* Pressure gauge port

SYNOPTIC, SIZES AND VERSIONS

FR+L	BIT	1/8	5	02	RMSA
ELEMENT	SIZE	THREADED PORT	DEGREE OF FILTRATION	SETTING RANGE	CONDENSATE DRAIN
FR+L	BIT	1/8 1/4	5 = 5 µm 20 = 20 µm 50 = 50 µm	02 = 0 to 2 bar 04 = 0 to 4 bar 08 = 0 to 8 bar 012 = 0 to 12 bar	RMSA SAC

RMSA: drain with manual condensate discharge and automatic discharge at zero pressure
SAC: automatic drain with condensate discharge.
Operates by pressure drop – requires variable air take-offs.

ORDERING CODES

Code	Description
5106008	FR+L BIT 1/8 20 08 RMSA
5106011	FR+L BIT 1/8 20 012 RMSA
5206008	FR+L BIT 1/4 20 08 RMSA
5206011	FR+L BIT 1/4 20 012 RMSA

The following versions are available on request:
- with 5 µm or 50 µm degree of filtration
- with 0-2 bar or 0-4 bar setting range
- with SAC condensate discharge

NOTES

FIL + DEP bit

METAL WORK PNEUMATIC

Compact filter + depurator unit for fine filtering followed by purification by coalescence.

- All-round condensate level viewing
- Condensate drainage - manual/semi-auto (RMSA) or automatic (SAC) on the filter
- 5 µm filter element.

TECHNICAL DATA		F + D BIT 1/8"	F + D BIT 1/4"
Threaded port		1/8"	1/4"
Degree of purification		5 µm filter – 99.97% depurator at 0.01 µm	
Max. inlet pressure	MPa	1.3	
	bar	13	
	psi	188	
Maximum suggested flow rate		Please look at the flow rate curves at page **C2**.7	
Fluid		Compressed air	
Max temperature at 1 MPa; 10 bar; 145 psi	°C	50	
	°F	122	
Weight	g	110	
Wall fixing screws		M4 by means of the bracket provided	
Mounting position		Vertical	
Condensate drain		RMSA: drain with manual condensate discharge and automatic discharge at zero pressure SAC: automatic drain with condensate discharge. **Operates by pressure drop – requires variable air take-offs**.	
Notes		See chapters regarding individual elements	

DIMENSIONS

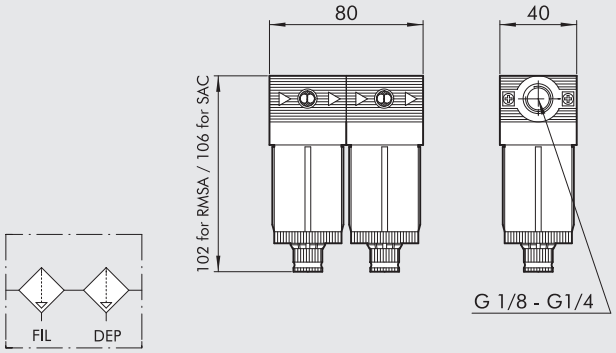

SYNOPTIC, SIZES AND VERSIONS

F+D	BIT	1/4	5	RMSA
ELEMENT	SIZE	THREADED PORT	DEGREE OF FILTRATION	CONDENSATE DRAIN
F+D	BIT	1/8 1/4	5 µm	RMSA SAC

RMSA: drain with manual condensate discharge and automatic discharge at zero pressure

SAC: automatic drain with condensate discharge.
Operates by pressure drop – requires variable air take-offs.

ORDERING CODES

Code	Description
5114001	F+D BIT 1/8 5 RMSA - RMSA
5114002	F+D BIT 1/8 5 SAC - RMSA
5214001	F+D BIT 1/4 5 RMSA - RMSA
5214002	F+D BIT 1/4 5 SAC - RMSA

FIL + LUB bit

Compact filter + lubricator unit with different degrees of filtration and high lubrication stability.

- Excellent degree of condensate separation
- Semi-automatic and automatic condensate drainage
- Lubrication activates at low flow rates
- All-round oil and condensate level viewing

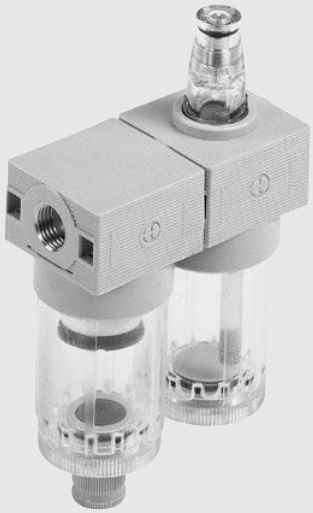

TECHNICAL DATA		F + L BIT 1/8″	F + L BIT 1/4″
Threaded port		1/8″	1/4″
Degree of filtration	µm	5 (yellow) - 20 (white) - 50 (blue)	
Max. inlet pressure	MPa	1.3	
	bar	13	
	psi	188	
Flow rate at 6 bar (0.6 MPa to 87 psi) ΔP 0.5 bar (0.05 MPa to 7 psi)	Nl/min	300	
	scfm	10.6	
Flow rate at 6 bar (0.6 MPa to 87 psi) ΔP 1 bar (0.1 MPa to 14 psi)	Nl/min	600	
	scfm	21.2	
Fluid		Compressed air	
Max temperature at 1 MPa; 10 bar; 145 psi	°C	50	
	°F	122	
Weight	g	90	
Wall fixing screws		M4 by means of the bracket provided	
Mounting position		Vertical	
Condensed drain		RMSA: drain with manual condensate discharge and automatic discharge at zero pressure	
		SAC: automatic drain with condensate discharge.	
		Operates by pressure drop – requires variable air take-offs.	
Notes		See chapters regarding individual elements	

DIMENSIONS

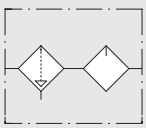

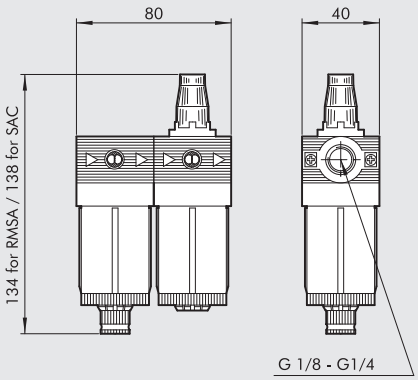

SYNOPTIC, SIZES AND VERSIONS

F+L	BIT	1/4	5	RMSA
ELEMENT	SIZE	THREADED PORT	DEGREE OF FILTRATION	CONDENSATE DRAIN
F+L	BIT	1/8 1/4	5 = 5 µm 20 = 20 µm 50 = 50 µm	RMSA SAC

RMSA: drain with manual condensate discharge and automatic discharge at zero pressure

SAC: automatic drain with condensate discharge.
Operates by pressure drop – requires variable air take-offs.

ORDERING CODES

Code	Description
5113002	F+L BIT 1/8 20 RMSA
5213002	F+L BIT 1/4 20 RMSA

The following versions are available on request:
- with 5 µm or 50 µm degree of filtration
- with SAC condensate discharge

GENERAL TECHNICAL DATA
bit SERIES F FOR WATER

METAL WORK PNEUMATIC

Filtering and/or water pressure regulation units, characterized by the use of materials certified to specific standards on products for use in contact with foodstuff or drinking water.
Declarations of conformity and release test reports are available on request for those who need them to certify our product incorporated in their own systems.
The white colour surface finish of the body was chosen to enhance the highly hygienic properties of the product.
If the pressure regulator works with incompressible fluids (water) and there is a valve leak, the downstream pressure could rise up to reach the inlet pressure and then it re-stabilizes with water consumption.
If necessary, consider the possibility of installing a safety valve that relieves any excess pressure.

TECHNICAL DATA		BIT F 1/8"	BIT F 1/4"
Threaded port		1/8"	1/4"
Max. inlet pressure	MPa	1.3	
	bar	13	
	psi	188	
Max temperature at 10 bar (1 MPa; 145 psi)	°C	50	
	°F	122	
Elements		Filter - Regulator - Filter regulator	
Mounting		Fixed to a wall, using fixing plate code 9170301 and M4 screws, or fixing bracket code 9200701 for the threaded regulator and filter-regulator bell. Panel-mounted using the threaded bell of the regulator or filter-regulator (Ø hole 30-32 mm).	
Fluid		Water, air and fluids compatible with the materials used	

WALL MOUNTING

The wall fixing of a bit unit can be made through:
- Fixing bracket R/FR code 9200701 (A)
- Wall fixing plates code 9170301 (B)

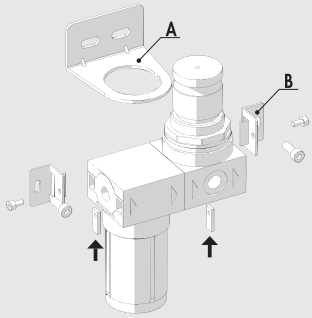

MATERIALS

COMPONENTS IN CONTACT WITH THE FLUID

Designation	Material	Certifications
Body	Hostaform® C13031	European Regulation (EU) 10/2011, KTW, W270, WRAS, ACS, NSF61
Threaded body inserts	CW510L low-lead brass	Approved for compliance with the UBA List, NSF/ANSI 372
Transparent bowl	TR90 Grilamid®	European Regulation (EU) 10/2011, KTW, W270, WRAS, NSF61
Rolling diaphragm	0477 NBR 70 telato	DM174/04, WRAS, ACS, NSF61
Valve	AISI 303 stainless steel	Approved for compliance with the UBA List
	with vulcanized gasket 0477 NBR 70	DM174/04, WRAS, ACS, NSF61
Valve spring	AISI 302 stainless steel	Approved for compliance with the UBA List
Gaskets	0477 NBR 70	DM174/04, WRAS, ACS, NSF61
Filter cartridge	GUR X192	European Regulation (EU) 10/2011,
Centrifuge	Hostaform® C13031	European Regulation (EU) 10/2011, KTW, W270, WRAS, ACS, NSF61
Baffle plug	Hostaform® C13031	European Regulation (EU) 10/2011, KTW, W270, WRAS, ACS, NSF61

COMPONENTS NOT IN CONTACT WITH THE FLUID

Designation	Material
Bell	Technopolymer
Fixing ring nut	Technopolymer
Nut	OT58 brass
Adjusting screw	OT58 brass
Adjusting spring	Steel

bit SERIES F FILTER FOR WATER

Water filter characterized by the use of materials certified to specific standards on products for use in contact with foodstuff or drinking water. Declarations of conformity and release test reports are available on request for those who need them to certify our product incorporated in their own systems.
The white colour surface finish of the body was chosen to enhance the highly hygienic properties of the product.
The transparent bowl was designed to make it possible to check the state of the filter cartridge.
Unlike compressed air filters, the bowl has no drain holes.
The cartridge filtration degree is 20 µm.

TECHNICAL DATA		FIL BIT F 1/8"	FIL BIT F 1/4"
Threaded port		1/8"	1/4"
Degree of filtration	µm	20 (white)	
Max. inlet pressure	MPa	1.3	
	bar	13	
	psi	188	
Flow rate at 6.3 bar (0.63 MPa ÷ 91 psi) ΔP 1 bar (0.1 MPa; 14 psi)	l/min	13	14.5
	cfm	0.46	0.51
Max temperature at 10 bar (1 MPa; 145 psi)	°C	50	
	°F	122	
Weight	g	40	
Internal volume	cm^3	40	
Mounting position		In any position	
Fluid		Water, air and fluids compatible with the materials used	

COMPONENTS

① Body with threaded inserts
② Transparent bowl
③ Baffle plug
④ Centrifuge
⑤ Gaskets
⑥ Filter cartridge

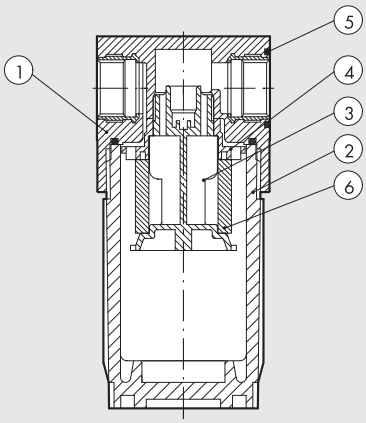

N.B.: For details on the materials used, please refer to the section "general technical data".

METAL WORK PNEUMATIC

FLOW CHARTS

FIL BIT F 1/8"

ΔP = (P In-P Out)

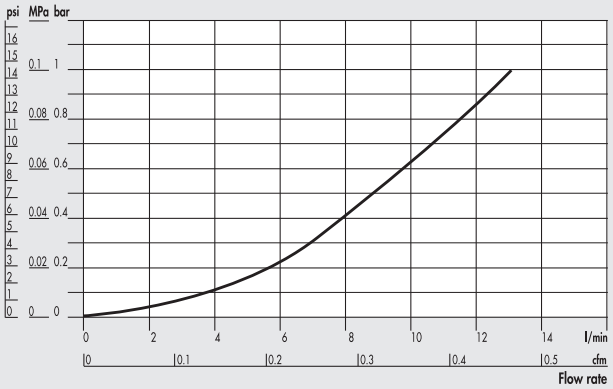

FIL BIT F 1/4"

ΔP = (P In-P Out)

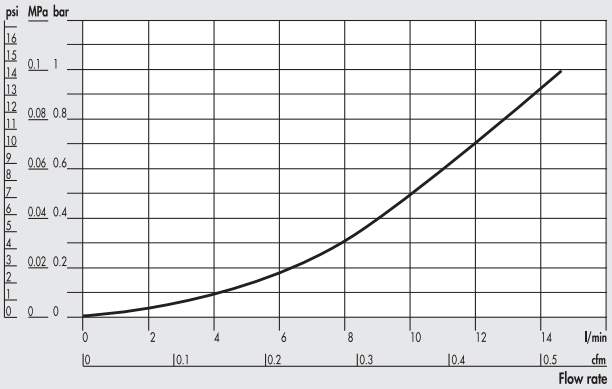

DIMENSIONS

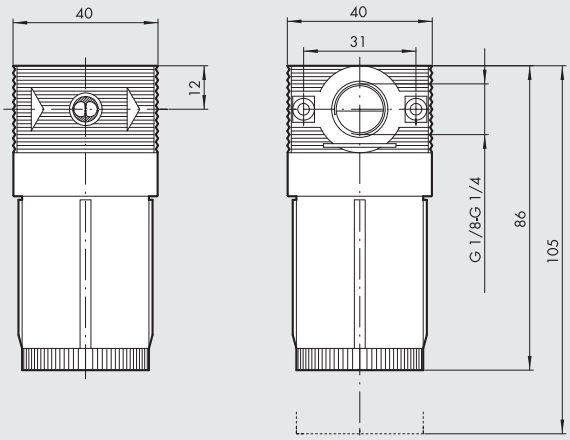

ORDERING CODES

Code	Description
5101002F	FIL BIT F 1/8 20
5201002F	FIL BIT F 1/4 20

NOTES

bit SERIES F REGULATOR FOR WATER

Water regulator characterized by the use of materials certified to specific standards on products for use in contact with foodstuff or drinking water. Declarations of conformity and release test reports are available on request for those who need them to certify our product incorporated in their own systems.
The white colour surface finish of the body was chosen to enhance the highly hygienic properties of the product.
Versions with brass threaded inlet and outlet ports and side sockets for pressure gauges and other uses with engineering plastic thread are available. There is also a version with inlet and outlet ports incorporated directly in the engineering plastic body, without requiring further threaded ports for pressure gauges.
If the pressure regulator works with incompressible fluids (water) and there is a valve leak, the downstream pressure could rise up to reach the inlet pressure and then it re-stabilizes with water consumption.
If necessary, consider the possibility of installing a safety valve that relieves any excess pressure.

TECHNICAL DATA		REG BIT F 1/8"	REG BIT F 1/4"
Threaded port		1/8"	1/4"
Setting range	bar	0 to 2; 0 to 4; 0 to 8; 0 to 12	
Max. inlet pressure	MPa	1.3	
	bar	13	
	psi	188	
Flow rate at 6.3 bar (0.63 MPa ÷ 91 psi) ΔP 1 bar (0.1 MPa; 14 psi)	l/min	6.5	7
	scfm	0.23	0.25
Max temperature at 10 bar (1 MPa; 145 psi)	°C	50°	
	°F	122°	
Weight	g	80	
Versions		With 1/8" or 1/4" brass threaded ports and 1/8" pressure gauge port.	
		With 1/4" engineering plastic threaded ports, without pressure gauge ports	
Mounting position		In any position	
Fluid		Water, air and fluids compatible with the materials used	
Notes		The pressure must always be set upwards.	
		For increased sensitivity, use a pressure regulator with a rated pressure as close as possible to the required value.	

COMPONENTS

① Body with incorporated threads or threaded inserts
② Bell
③ Fixing ring nut
④ Knob
⑤ Rolling diaphragm
⑥ Plug
⑦ Anti-vibration screen
⑧ Plate with gasket
⑨ Adjusting screws
⑩ Valve gasket
⑪ Nut
⑫ Adjusting spring
⑬ Valve spring
⑭ Gaskets

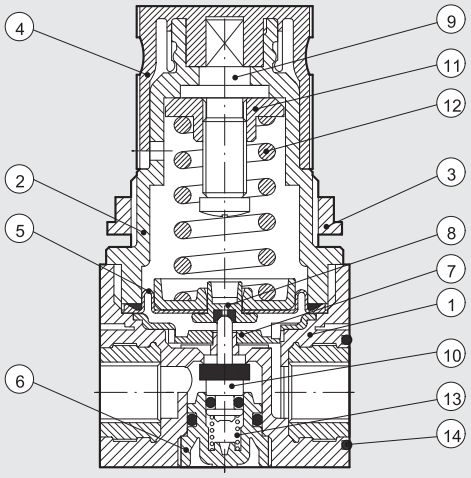

N.B.: For details on the materials used, please refer to the section "general technical data".

METAL WORK PNEUMATIC

FLOW CHARTS

REG BIT F 1/8″ 0-2

Pm = 0.9 MPa; 9 bar; 130 psi

Regulated pressure

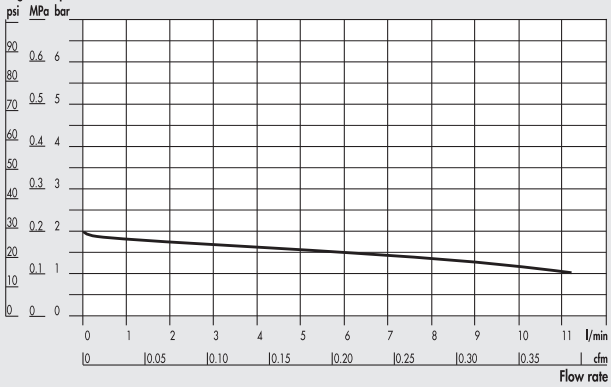

REG BIT F 1/4″ 0-2

Pm = 0.9 MPa; 9 bar; 130 psi

Regulated pressure

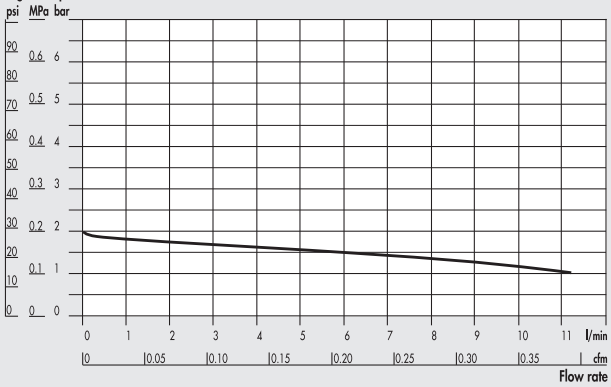

REG BIT F 1/8″ 0-4

Pm = 0.9 MPa; 9 bar; 130 psi

Regulated pressure

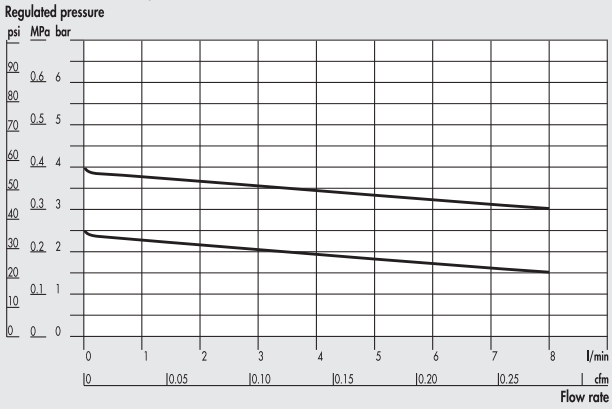

REG BIT F 1/4″ 0-4

Pm = 0.9 MPa; 9 bar; 130 psi

Regulated pressure

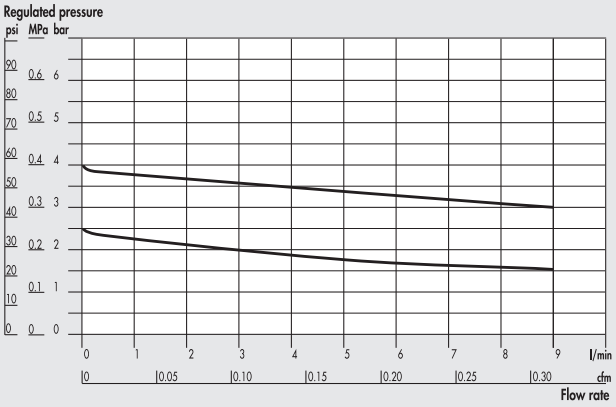

REG BIT F 1/8″ 0-8; 0-12

Pm = 0.9 MPa; 9 bar; 130 psi

Regulated pressure

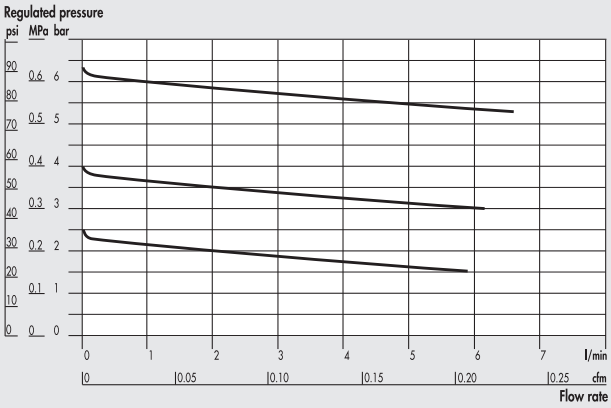

REG BIT F 1/4″ 0-8; 0-12

Pm = 0.9 MPa; 9 bar; 130 psi

Regulated pressure

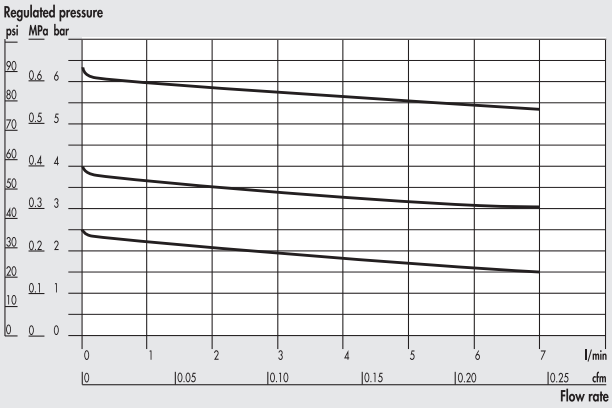

DIMENSIONS

DETAIL OF VERSION
IN TECHNOPOLYMER

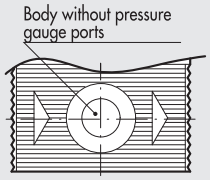

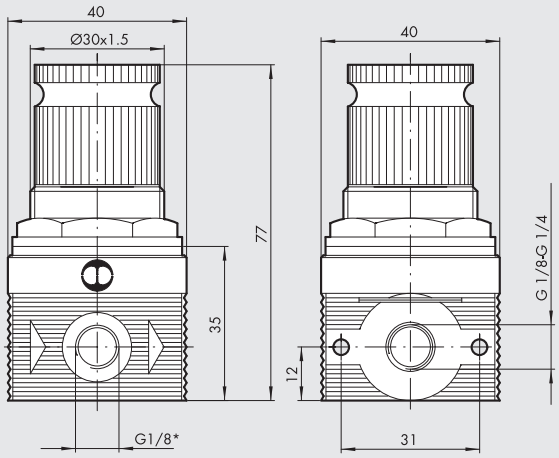

* Pressure gauge port (not supplied in the technopolymer version)

ORDERING CODES

Code	Description
REGULATOR WITH BRASS PORTS	
5108001F	REG BIT F 1/8 02
5108002F	REG BIT F 1/8 04
5108003F	REG BIT F 1/8 08
5108004F	REG BIT F 1/8 012
5208001F	REG BIT F 1/4 02
5208002F	REG BIT F 1/4 04
5208003F	REG BIT F 1/4 08
5208004F	REG BIT F 1/4 012
REGULATOR WITH TECHNOPOLYMER PORTS **	
5228001F	REG BIT F 1/4 TP 02
5228002F	REG BIT F 1/4 TP 04
5228003F	REG BIT F 1/4 TP 08
5228004F	REG BIT F 1/4 TP 012

** Without pressure gauge ports

NOTES

bit SERIES F FILTER-REGULATOR FOR WATER

METAL WORK PNEUMATIC

Filter-regulator characterized by the use of materials certified to specific standards on products for use in contact with foodstuff or drinking water. Declarations of conformity and release test reports are available on request for those who need them to certify our product incorporated in their own systems. The white colour surface finish of the body was chosen to enhance the highly hygienic properties of the product.
The transparent bowl was designed to make it possible to check the state of the filter cartridge. The transparent bowl was designed to make it possible to check the state of the filter cartridge.
Unlike compressed air filters, the bowl has no drain holes.
The cartridge filtration degree is 20 µm.
If the pressure regulator works with incompressible fluids (water) and there is a valve leak, the downstream pressure could rise up to reach the inlet pressure and then it re-stabilizes with water consumption. If necessary, consider the possibility of installing a safety valve that relieves any excess pressure.

TECHNICAL DATA		FR BIT F 1/8"	FR BIT F 1/4"
Threaded port		1/8"	1/4"
Setting range	bar	0 to 2; 0 to 4; 0 to 8; 0 to 12	
Degree of filtration	µm	20 (white)	
Max. inlet pressure	MPa	1.3	
	bar	13	
	psi	188	
Flow rate at 6.3 bar (0.63 MPa ÷ 91 psi) ΔP 1 bar (0.1 MPa; 14 psi)	l/min	6	6
	cfm	0.21	0.21
Max temperature at 10 bar (1 MPa; 145 psi)	°C	50	
	°F	122	
Weight	g	110	
Mounting position		In any position	
Fluid		Water, air and fluids compatible with the materials used	
Notes		The pressure must always be set upwards.	
		For increased sensitivity, use a pressure regulator with a rated pressure as close as possible to the required value.	

COMPONENTS

① Body with threaded inserts
② Bowl
③ Knob
④ Bell
⑤ Fixing ring nut
⑥ Nut
⑦ Adjusting screws
⑧ Adjusting spring
⑨ Plate with gasket
⑩ Rolling diaphragm
⑪ Valve
⑫ Valve spring
⑬ Centrifuge
⑭ Baffle plug
⑮ Filter cartridge
⑯ Gaskets
⑰ Anti-vibration screen

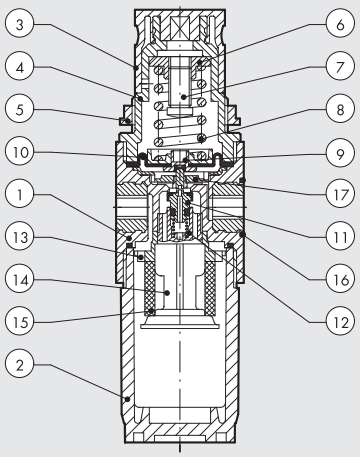

N.B.: For details on the materials used, please refer to the section "general technical data".

FLOW CHARTS

FR BIT F 1/8″ 0-2

Pm = 0.9 MPa; 9 bar; 130 psi
Regulated pressure

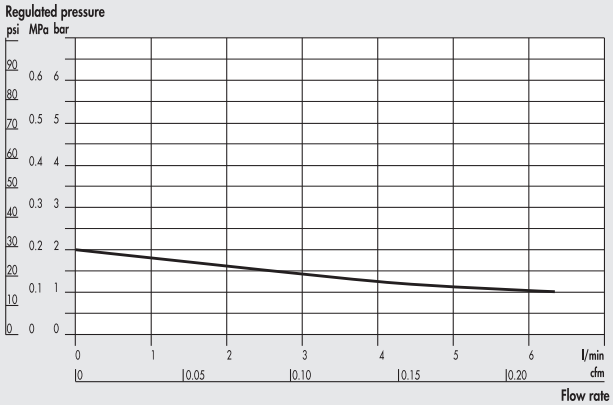

FR BIT F 1/4″ 0-2

Pm = 0.9 MPa; 9 bar; 130 psi
Regulated pressure

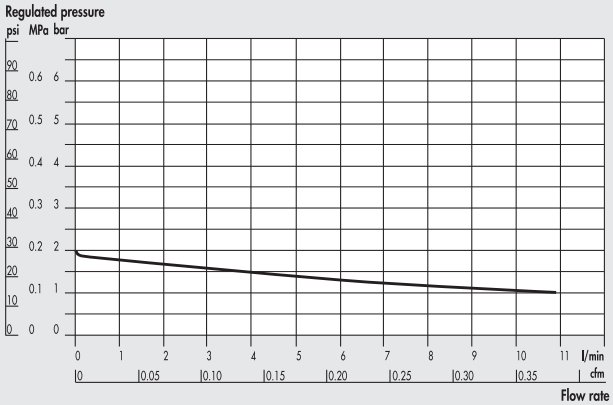

FR BIT F 1/8″ 0-4

Pm = 0.9 MPa; 9 bar; 130 psi
Regulated pressure

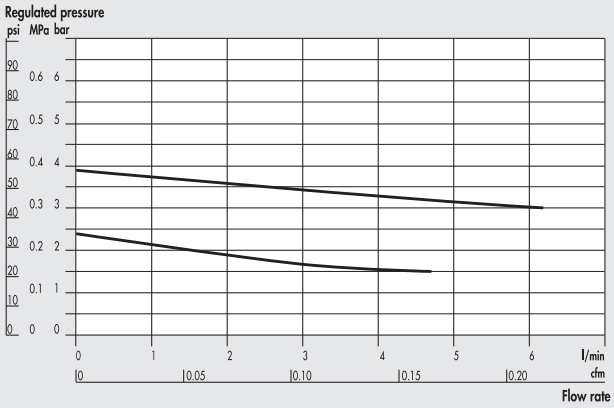

FR BIT F 1/4″ 0-4

Pm = 0.9 MPa; 9 bar; 130 psi
Regulated pressure

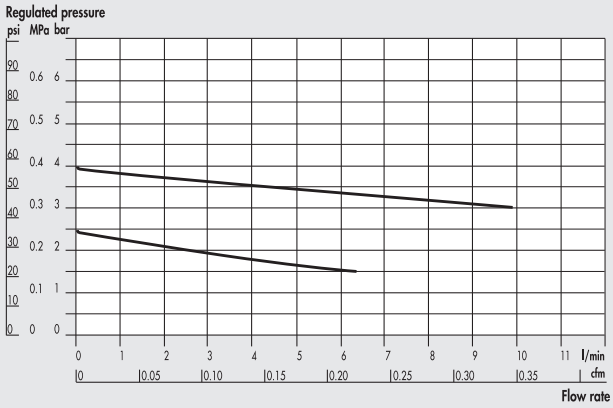

FR BIT F 1/8″ 0-8; 0-12

Pm = 0.9 MPa; 9 bar; 130 psi
Regulated pressure

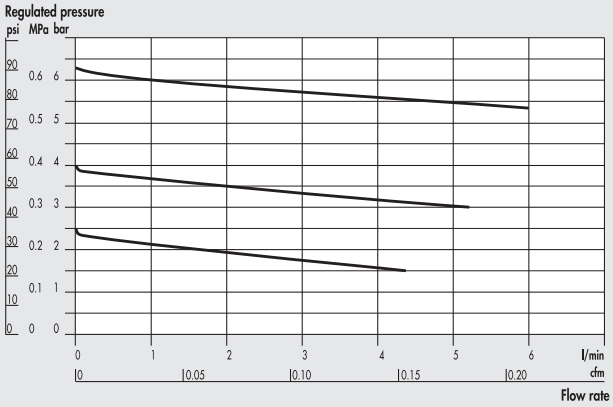

FR BIT F 1/4″ 0-8; 0-12

Pm = 0.9 MPa; 9 bar; 130 psi
Regulated pressure

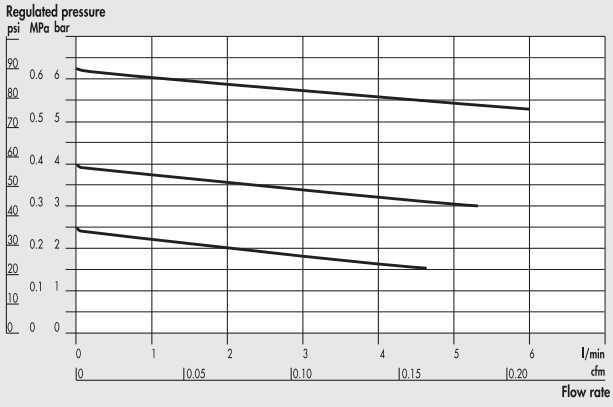

METAL WORK PNEUMATIC

DIMENSIONS

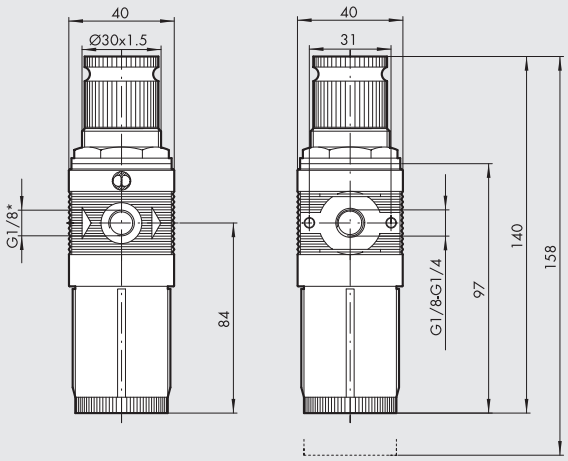

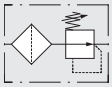

* Pressure gauge port

ORDERING CODES

Code	Description
5105102F	FR BIT F 1/8 20 02
5105105F	FR BIT F 1/8 20 04
5105108F	FR BIT F 1/8 20 08
5105111F	FR BIT F 1/8 20 012
5205102F	FR BIT F 1/4 20 02
5205105F	FR BIT F 1/4 20 04
5205108F	FR BIT F 1/4 20 08
5205111F	FR BIT F 1/4 20 012

NOTES

bit ACCESSORIES

ACCESSORIES FOR STANDARD bit AND SERIES F bit FOR WATER

PRESSURE GAUGE

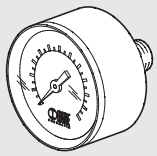

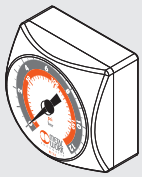

Code	Description
9700102 *	M 40 1/8 04
9700101 *	M 40 1/8 012
9700109 *	M 40x40 1/8 04
9700110 *	M 40x40 1/8 012

* Cannot be used with water

DOME DISASSEMBLY SPANNER

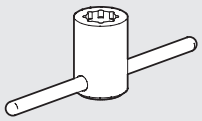

Code	Description
9220701	Cover LUB spanner

R/FR FIXING BRACKET

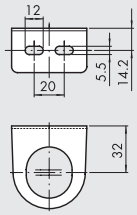

Code	Description
9200701	SF100 - BIT - ND 1/4 - SY1

COVER DISASSEMBLY SPANNER

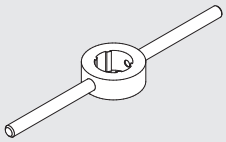

Code	Description
9170401	CS CS BIT

ASSEMBLY PLATE (PAIR)

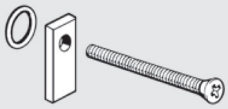

Code	Description
9170201	PAB 1/8 - 1/4 BIT

REDUCER PLUG DISASSEMBLY SPANNER

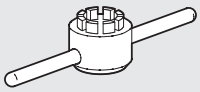

Code	Description
9170501	CS OTR BIT

WALL MOUNTING BRACKET (PAIR)

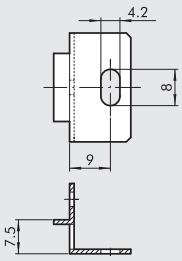

Code	Description
9170301	SFB 1/8 - 1/4 BIT

BOWL DISASSEMBLY SPANNER

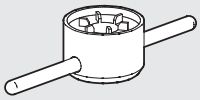

Code	Description
9170601	CS TF - TL BIT - SY1

bit SPARE PARTS

SPARE PARTS FOR STANDARD bit

UPPER COVER FOR MR

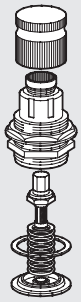

Code	Description
9250805	Spares CS 1/8 1/4 BIT 02
9250806	Spares CS 1/8 1/4 BIT 04
9250807	Spares CS 1/8 1/4 BIT 08
9250808	Spares CS 1/8 1/4 BIT 012

FILTER AND FILTER-REGULATOR BOWL

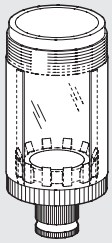

Code	Description
9255001	Spares TF 1/8 1/4 BIT RMSA
9255101	Spares TF 1/8 1/4 BIT SAC

UPPER COVER FOR MR FC

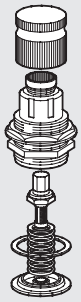

Code	Description
9250817	Spares CS FC 1/8 1/4 BIT 02
9250818	Spares CS FC 1/8 1/4 BIT 04

AUTOMATIC DRAIN (SAC)

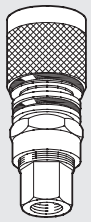

Code	Description
9000803	Spares SAC automatic drain

UPPER COVER FOR MRA

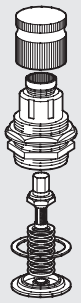

Code	Description
9250809	Spares CSA 1/8 - 1/4 BIT 02
9250814	Spares CSA 1/8 - 1/4 BIT 04
9250815	Spares CSA 1/8 - 1/4 BIT 08
9250816	Spares CSA 1/8 - 1/4 BIT 012

LUBRICATOR BOWL

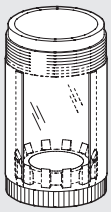

Code	Description
9251402	Spares TL 1/8 1/4 BIT

COMPLETE POPPET FOR MR AND MRA

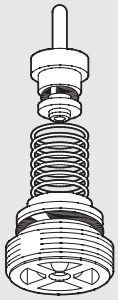

Code	Description
9250705	Spares poppet for MR
9250706	Spares poppet for MR-SR (rapid drain)
9250708	Spares poppet for MRA

FILTER ELEMENT

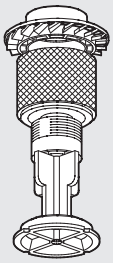

Code	Description
9251708	Spares FP 1/8-1/4 BIT 5 (yellow)
9251709	Spares FP 1/8-1/4 BIT 20 (white)
9251710	Spares FP 1/8-1/4 BIT 50 (blue)

FILTER CARTRIDGE

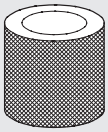

Code	Description
9251808	Spares filter cartridge BIT 5 (yellow)
9251809	Spares filter cartridge BIT 20 (white)
9251810	Spares filter cartridge BIT 50 (blue)

TRANSPARENT LUBRICATOR COVER

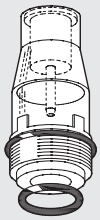

Code	Description
9251302	Spares CVL 100-200-300-400 BIT

DEPURATOR FILTER ELEMENT

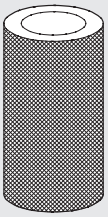

Code	Description
9251712	Spares FP DEP. 1/8 1/4 BIT

SPRING FOR MR, FR

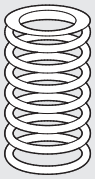

Code	Description
9250610	Spares MO 02 BIT
9250611	Spares MO 04 BIT
9250612	Spares MO 08 BIT
9250613	Spares MO 012 BIT

COMPLETE POPPET FOR FR

Code	Description
9250905	Spares OTFR 1/8 1/4 BIT 5 (yellow)
9250906	Spares OTFR 1/8 1/4 BIT 20 (white)
9250907	Spares OTFR 1/8 1/4 BIT 50 (blue)

NOTES

SPARE PARTS FOR SERIES F bit FOR WATER

FILTER ELEMENT

Code	Description
9251709	Spares FP 1/8-1/4 BIT 20 (white)

SPRING FOR REG F, FR F

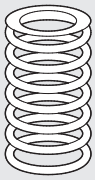

Code	Description
9250610	Spares MO 02 BIT
9250611	Spares MO 04 BIT
9250612	Spares MO 08 BIT
9250613	Spares MO 012 BIT

FILTER CARTRIDGE

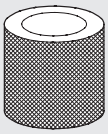

Code	Description
9251809	Spares filter cartridge BIT 20 (white)

NOTES

METAL WORK PNEUMATIC

NOTES